Cherrington

Beachcleaner

PARTS LIST

112334- 112346

CHERRINGTON CORPORATION
P.O. BOX A
FAIRFAX, MN 55332
PHONE 507-426-7261
FAX 507-426-7263

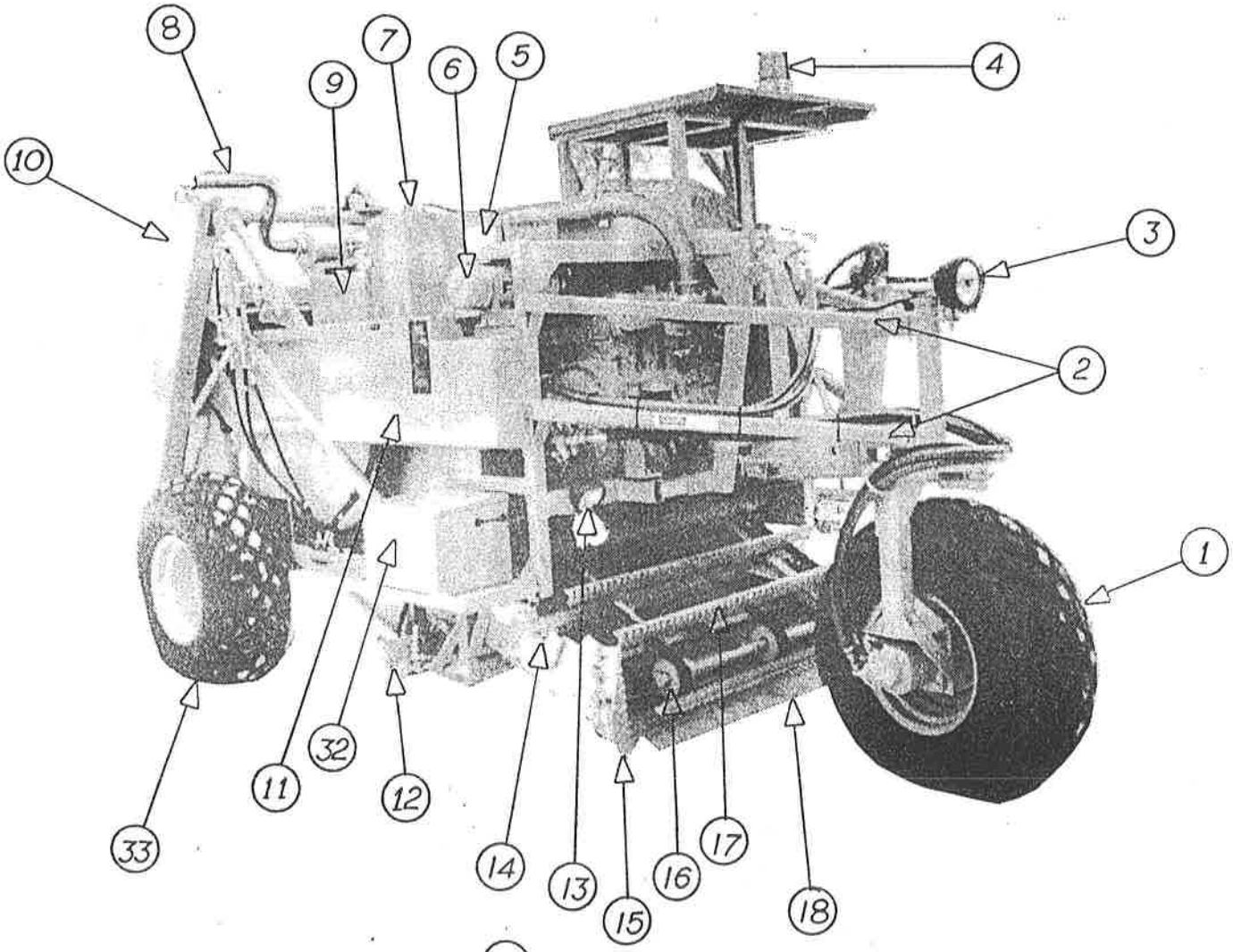
8
7
6
5
4
9
10
3
2
1
32
11
12
33
14
13
15
16
17
18

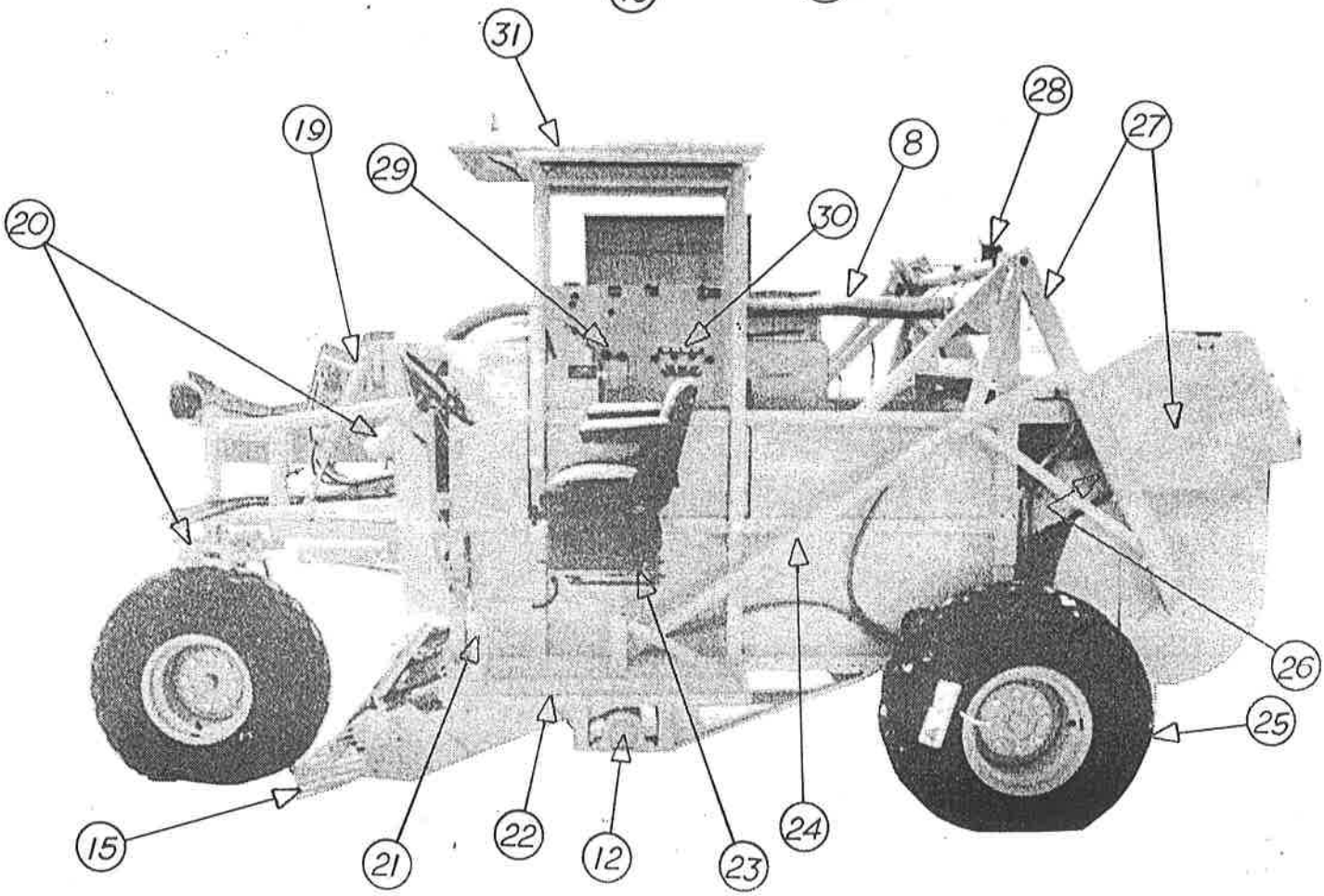
31
28
19
29
8
27
20
30
26
25
15
21
22
12
23
24

PARTS LIST

BEACHCLEANER OVERALL LEGEND

NOTE: THIS VIEW MAY BE PICTORIALLY INCORRECT FOR YOU PARTICULAR MACHINE HOWEVER, THE PART NUMBERS LISTED ARE CORRECT FOR YOUR MACHINE.

Ref No.	Part No./ Page No.	Description	Qty.
1	K	Wheel Assembly, (Front)	1
2	000587W	Stabilizer Arm Wld	4
	000622M	Spacer, Stabilizer 2-9/16	4
	000876P	Zerk, 1/8 NPT Spin-Drive	4
3	000443P	Light, Head	1
4	002392P	Light, Strobe	1
5	000180P	Filter, Hyd. Head & Element	1
	000177P	Indicator, Low Pres, Hyd Fltr	1
	000183P	Filter, Hyd.-Repl. Element	
	000180P	Filter, Hyd, Head & Element	1
	000175P	Indicator, Vacuum, Hyd Fltr	1
	000183P	Filter, Hyd.-Repl. Element	
6	D	Air Cleaner	
7	U	Oil Tank	
8	F	Exhaust System	
9	G	Fuel System	
10	T	Rollover Mechanism	
11	000158W	Manifold Wld, Hyd Oil	1
	002132	Valve, 4 GPM Priority	1
12	N	Oscillator Mechanism	
13	000090P	Light, Working	3
14	P	Front Conv. Support Assy	
15	002439P	Sweep Set, B/A 1" SLT, 2" TU	*
16	Q	Front Conveyor Shaft	
17	O	Flight System	
18	L	Screen/Digger Point System	
19	002144	Cylinder, Digger	1
	000312P	Stroke Control Set	1
	000396P	Seal Kit	1
	000646W	Mount, Digger Cylinder	1
20	S	Power Steering Components	
21	000093P	Switch, Deadman	1
	000136M	Spring Button, Deadman	1
22	000170W	Platform, Flip	1
23	003078P	Seat, #ES700-4 Modified	1
	000753W	Seat Post Wld	1
24	002142	Cylinder, Boom Hoist	2
	* 000394P	Seal Kit UPDATED P/N: 71.P259101	1
25	J	Wheel Assembly (Left)	
26	R	Conveyor Drive Mechanism	
27	T	Hopper System	
28	002040P	Alarm, Back-Up, Preco 45AA	1
29	H	Throttle & Trans. Linkage	
30	V	Valves & Gauges	
31	000774A	Canopy R.O.P.S./F.O.P.S.	*
32	003196	Batt Box, Bolt On	1
	000730W	Cover, Batt Box	1
	W	Emerg. Towing Jack (Inside Box)	
33	I	Wheel Assy, (Right)	

*Optional

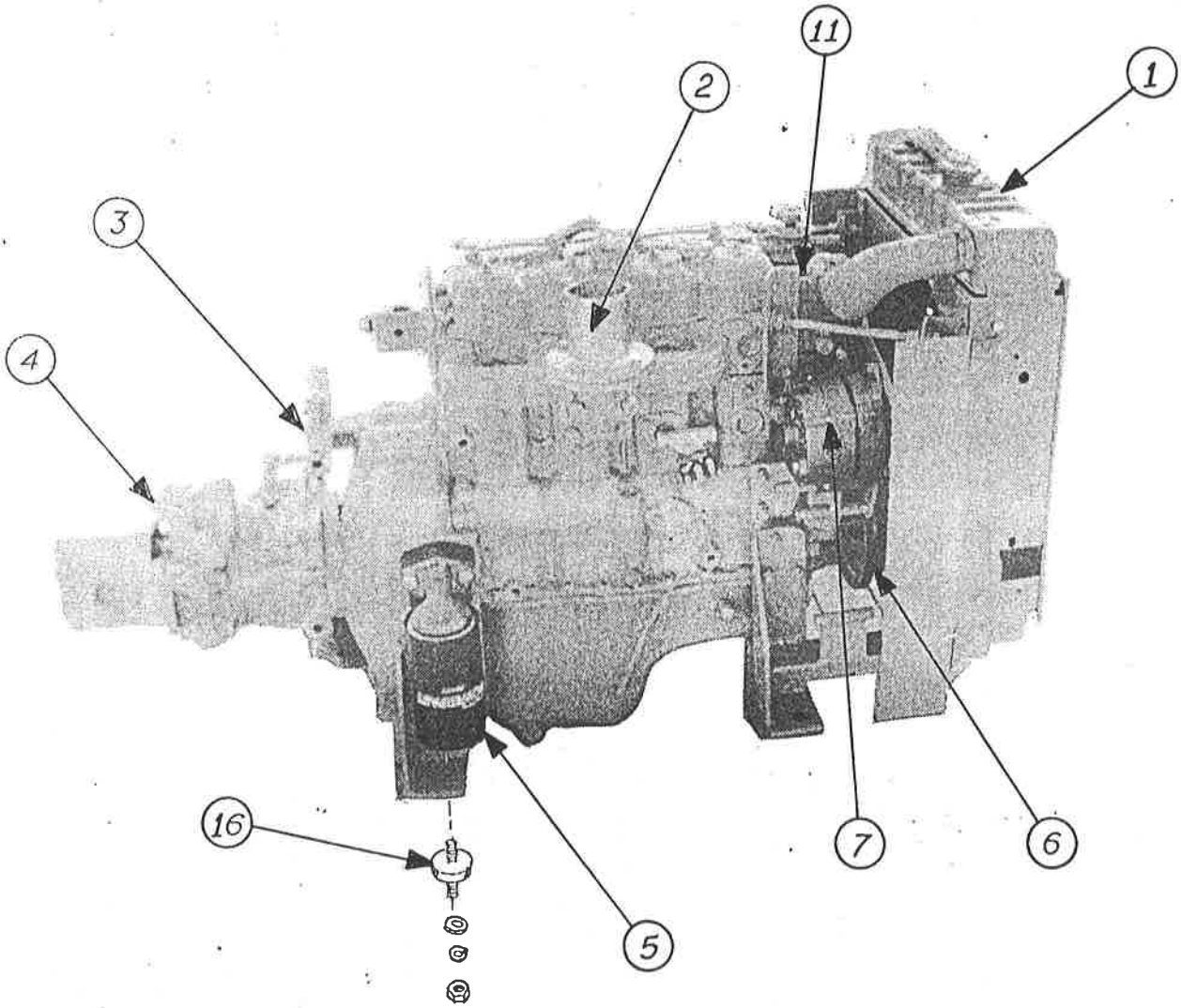
11
2
1
3
4
16
7
6
5

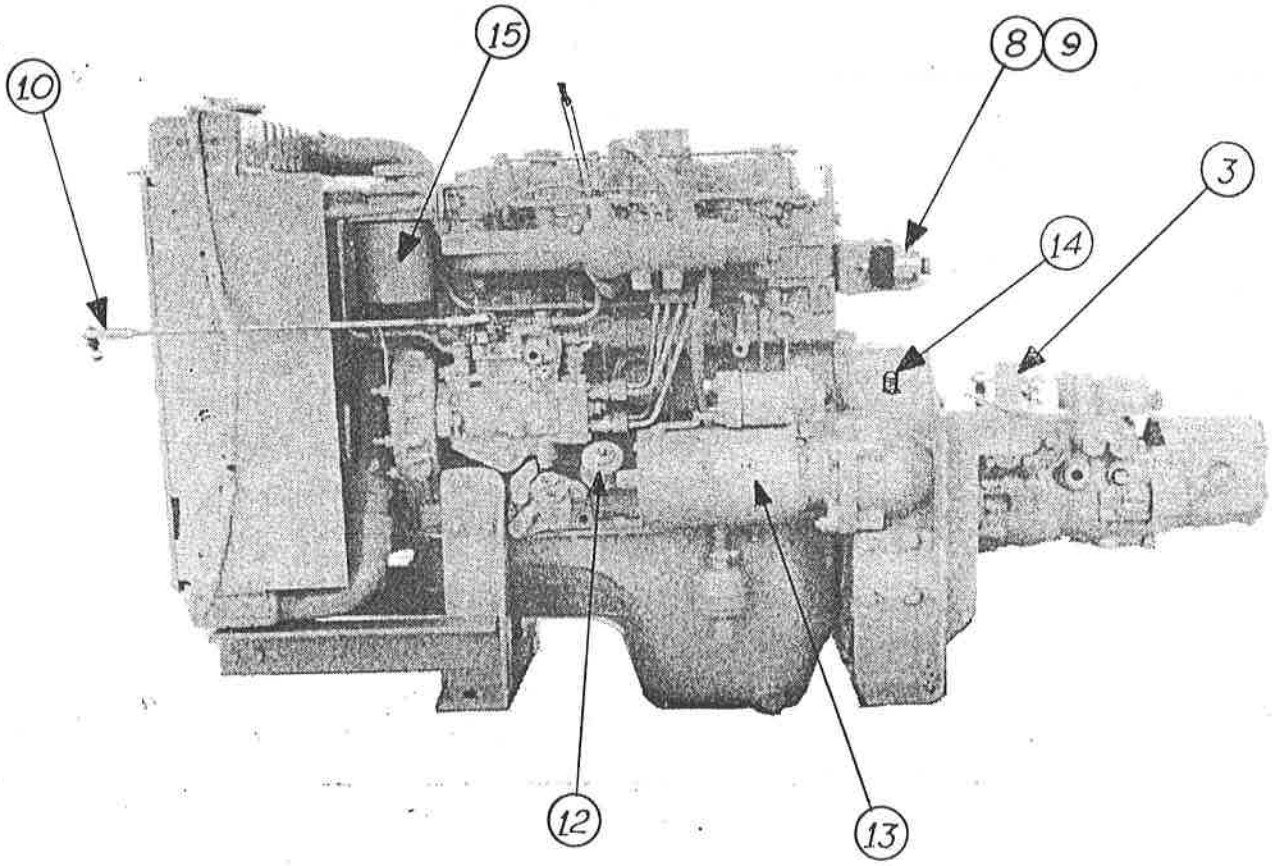
15
8
9
10
3
14
12
13

PARTS LIST

ENGINE/PUMP ASSY (204-30)

NOTE: THIS VIEW MAY BE PICTORIALLY INCORRECT FOR YOUR PARTICULAR MACHINE HOWEVER, THE PART NUMBERS LISTED ARE CORRECT FOR YOUR MACHINE.

Ref No.	Page No. Part No.	Description	Qty
1	E	Radiator and Components	
2	F	Exhaust System	
3	H	Transmission Linkage	
4	C	Transmission/Drive Coupling Assembly	
5	000586P	Filter, Engine Oil 4.154/204-30	1
6	003502P	Belt, Fan/Alt 204-30	1
7	003503P	Alternator, 204-30	1
8	003504P	Relay, Glow Plug 204-30	1
9	003505P	Glow Control Unit, 204-30	1
10	H	Throttle Linkage Assy	
11	003461P	Sender, Water Temp (Datcon)	1
12	000095P	Sender, Oil Pressure	1
13	003506P	Starter Motor, 204-30 Engine	1
14	003439P	Sender, Tachometer	1
15	000727P	Filter, Fuel 4.154/204-30	1
16	002847P	Mt, Rubber 1/2", 3/8-16 NC	4

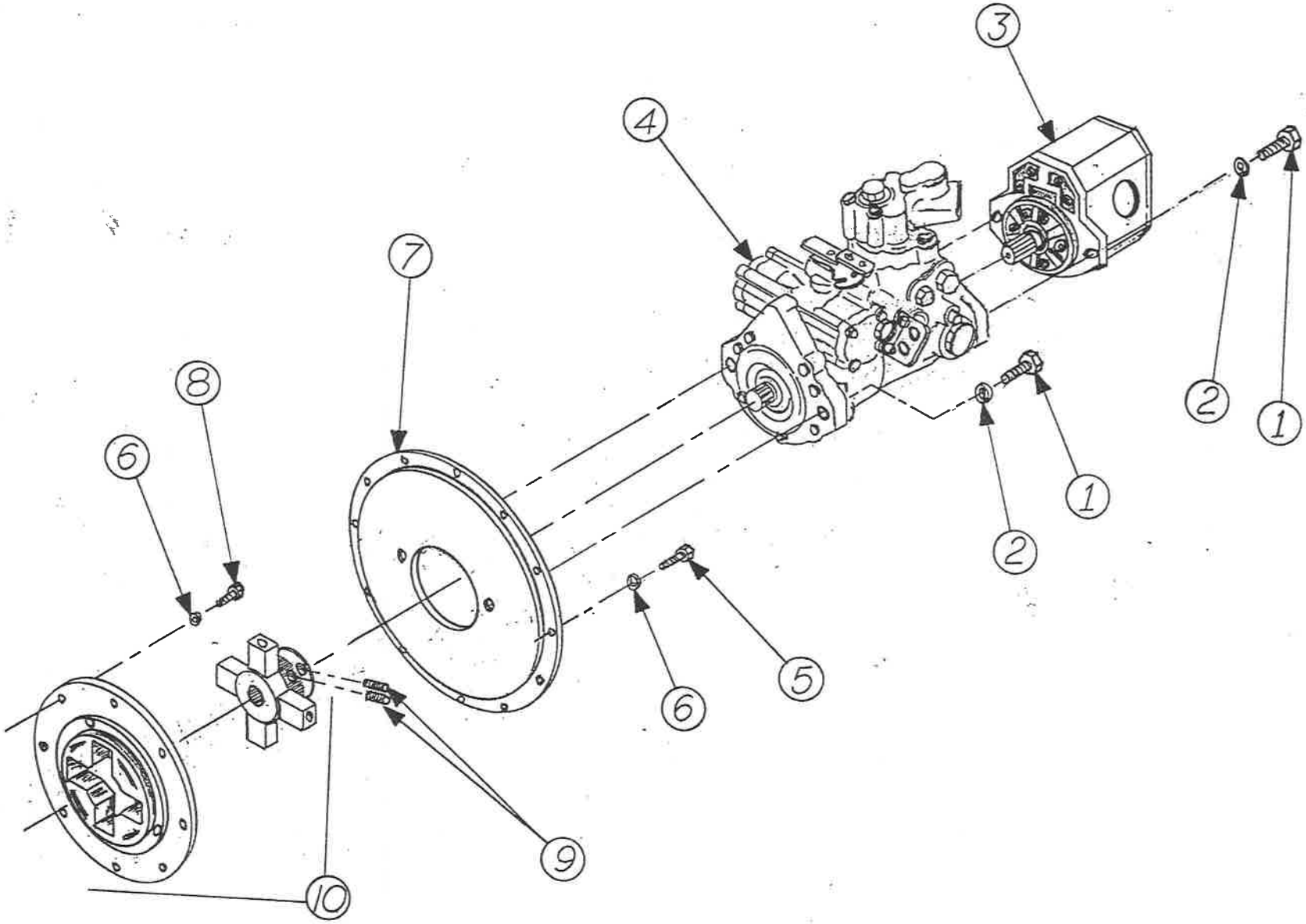
3
4
7
8
6
2
1
1
2
6
5
9
10

PARTS LIST

TRANSMISSION/DRIVE COUPLING ASSY

Ref No.	Part No.	Description	Qty
1	000984P	Bolt, 1/2-13 NC x 1-3/4	4
2	000990P	Washer, Lock, 1/2	4
3	003441P	Pump, Gear Tap 22/90-22	1
4	000596P	Pump, Transmission (M46)	1
5	003908P	Bolt, M10-1.5 x 30 MM	12
6	003904P	Washer, Lock - M10	20
7	003442P	Cover, Flywhl Hsing/Pump Mt	1
8	003909P	Bolt, M10-1.5 x 20 MM	8
9	002305P	Set Screw, 12 x 20 MM Dog Pt.	2
10	003443P	Cplg, Drive Assy 15T Ser K	1

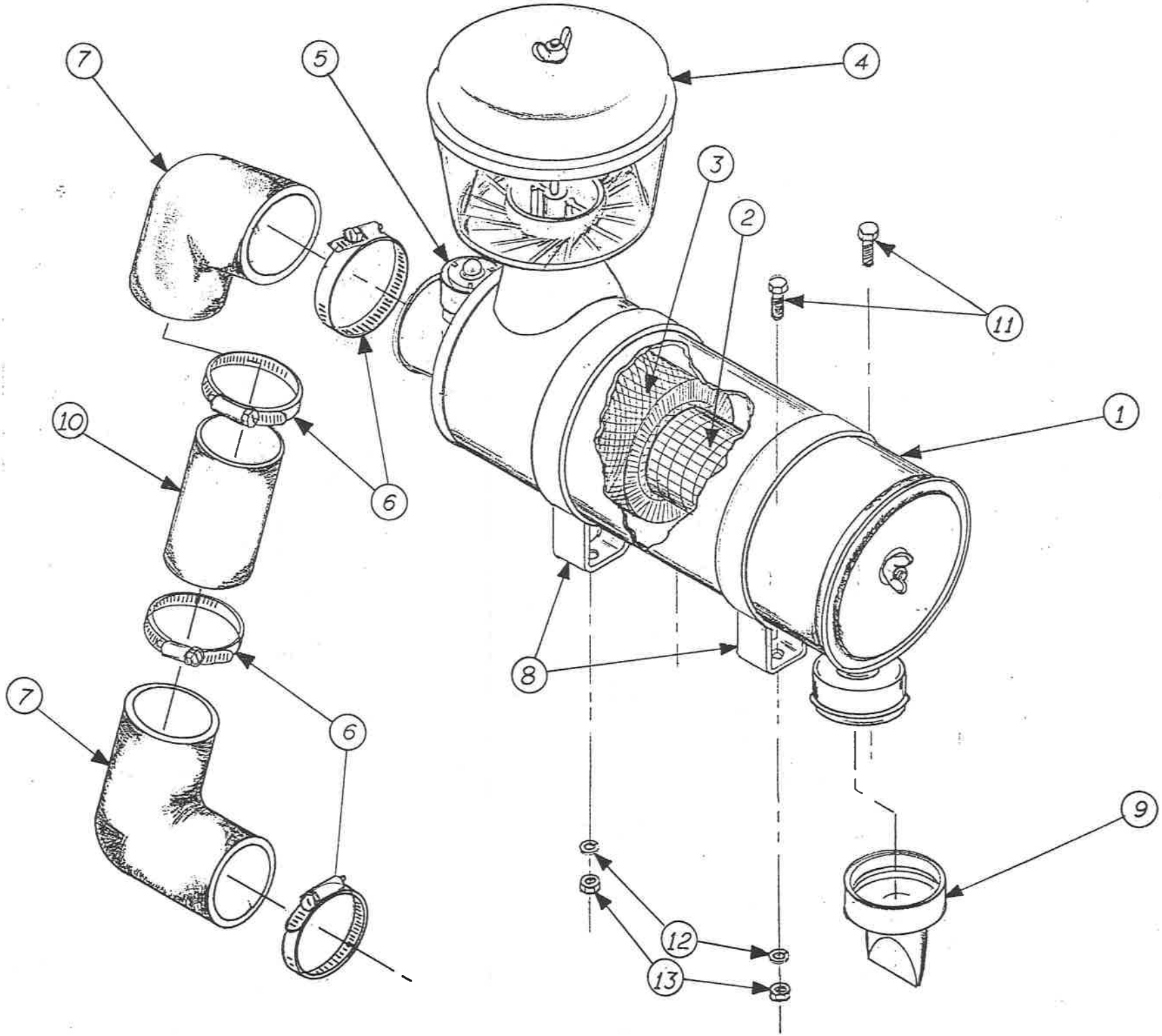
7
5
4
3
2
11
1
10
6
8
7
6
9
12
13

PARTS LIST

AIR CLEANER SYSTEM

Ref No.	Part No.	Description	Qty
1	003451P	Air Cleaner Body Assy FHG-STY B Includes: 2,3, & 9	1
2	003500P	Filter, Air, Safety	1 UPDATED P/N: 71.P371375
3	003499P	Filter, Air, Primary	1 UPDATED P/N: 71.P371365
4	003452P	Pre-Cleaner, 3" Inlet	1
5	000354P	Indicator, Air Clnr Service,20"	1
6	003501P	Clamp, Hose, Size 48	4
7	003454P	Hose, Air Intake Elbow 3" ID	2
8	003453P	Mtg Band, A/C 6.5"	2
9	003495P	Valve, Vacuator 3"	1
10	003455	Tube, Air Intake 3"	1
11	000900P	Bolt, 1/4"-20 NC x 3/4"	4
12	000909P	Washer, Lock, 1/4"	4
13	000907P	Nut, Lock, 1/4"-20 NC	4

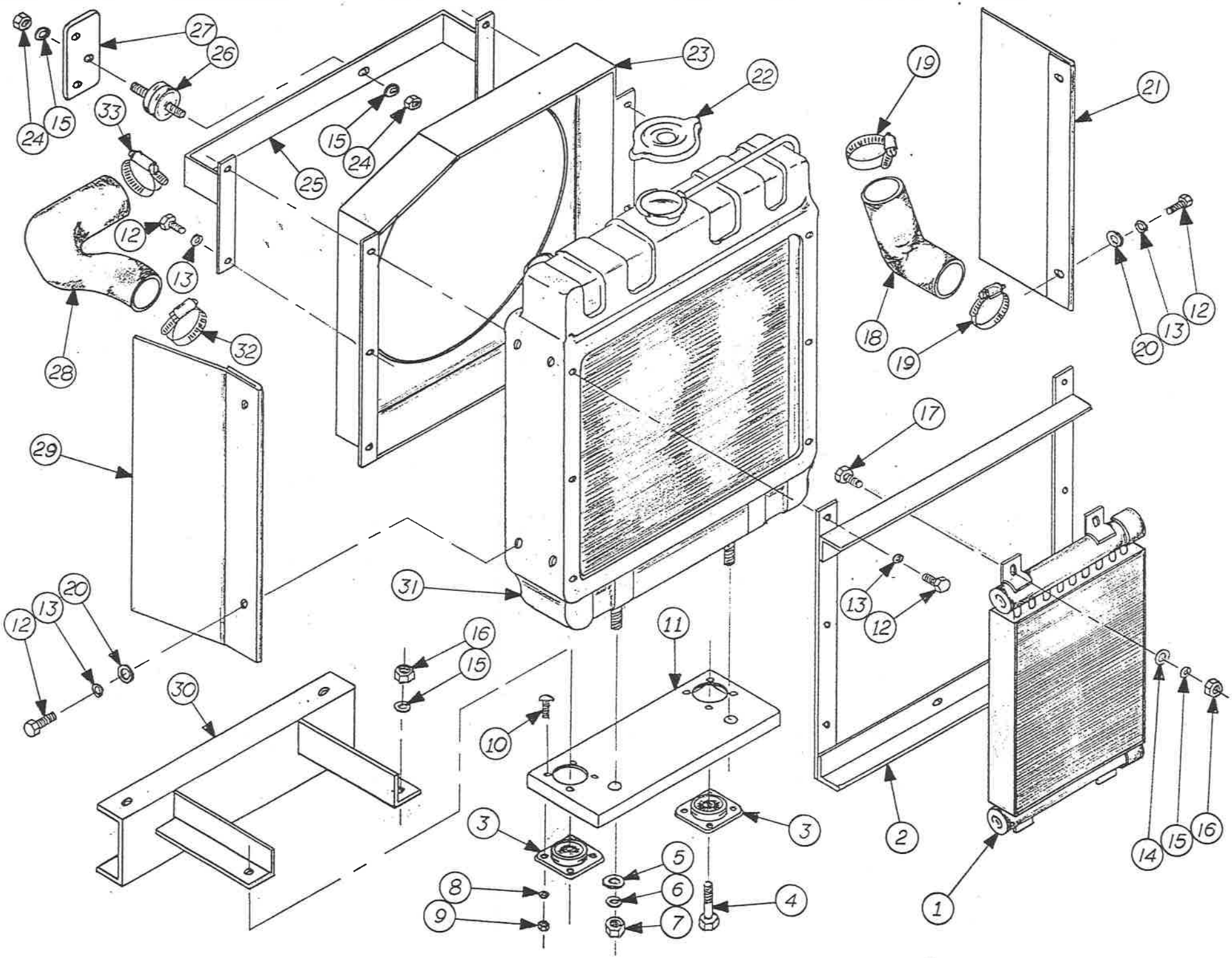
27
26
24
15
33
15
24
23
22
19
21
25
12
13
28
32
18
19
20
13
12
29
17
31
13
12
12
13
20
16
15
11
30
10
3
3
2
14
15
16
1
5
6
7
8
9
4

PARTS LIST

RADIATOR COMPONENTS

Ref. No.	Part No.	Description	Qty
1	003460P	Cooler, Hyd Oil (65032-2)	1
2	003425	Brkt, Oil Cooler Mtg	1
3	003437P	Mt, Radiator Shock	2
4	000949P	Bolt, 3/8-16 NC x 2	2
5	000991P	Washer, Flat, 1/2, ZP	2
6	000990P	Washer, Lock, 1/2	2
7	000988P	Nut, Lock, 1/2-13 NC	2
8	000917P	Washer, Lock, 3/16, ZP	8
9	000915P	Nut, Hex, 10-32 ZP	8
10	001690P	Screw, Tapping, 10-32 x 1/2	8
11	003422	Brkt, Radiator Base	1
12	000920P	Bolt, 5/16-18 NC x 3/4	16
13	000928P	Washer, Lock, 5/16	16
14	000956P	Washer, Flat, 3/8	4
15	000955P	Washer, Lock, 3/8, ZP	6
16	000953P	Nut, Lock, 3/8-16 NC	4
17	000946P	Bolt, 3/8-16 NC x 1	4
18	003430	Hose, Radiator, Lower (204-30)	1
19	002075P	Clamp, Hose, 1028	2
20	000929P	Washer, Flat, 5/16	4
21	003434	Guard, Fan LS	1
22	002081P	Cap, Radiator	1
23	003432	Shroud, Fan (204-30)	1
24	000960P	Nut, Hex, 3/8-16 NC Grd 8	2
25	003423	Brkt, Radiator Top	1
26	000303P	Mount, Rubber 7/8	1
27	003424	Brkt, Radiator Stay Eng.	1
28	003429	Hose, Radiator, Upper (204-30)	1
29	003433	Guard, Fan RS	1
30	003421	Brkt, Eng Spacer/Rad Mtg	1
31	003436P	Radiator, ESR-K44	1
32	002074P	Clamp, Hose 1024	1
33	002228P	Clamp, Hose 1032	1

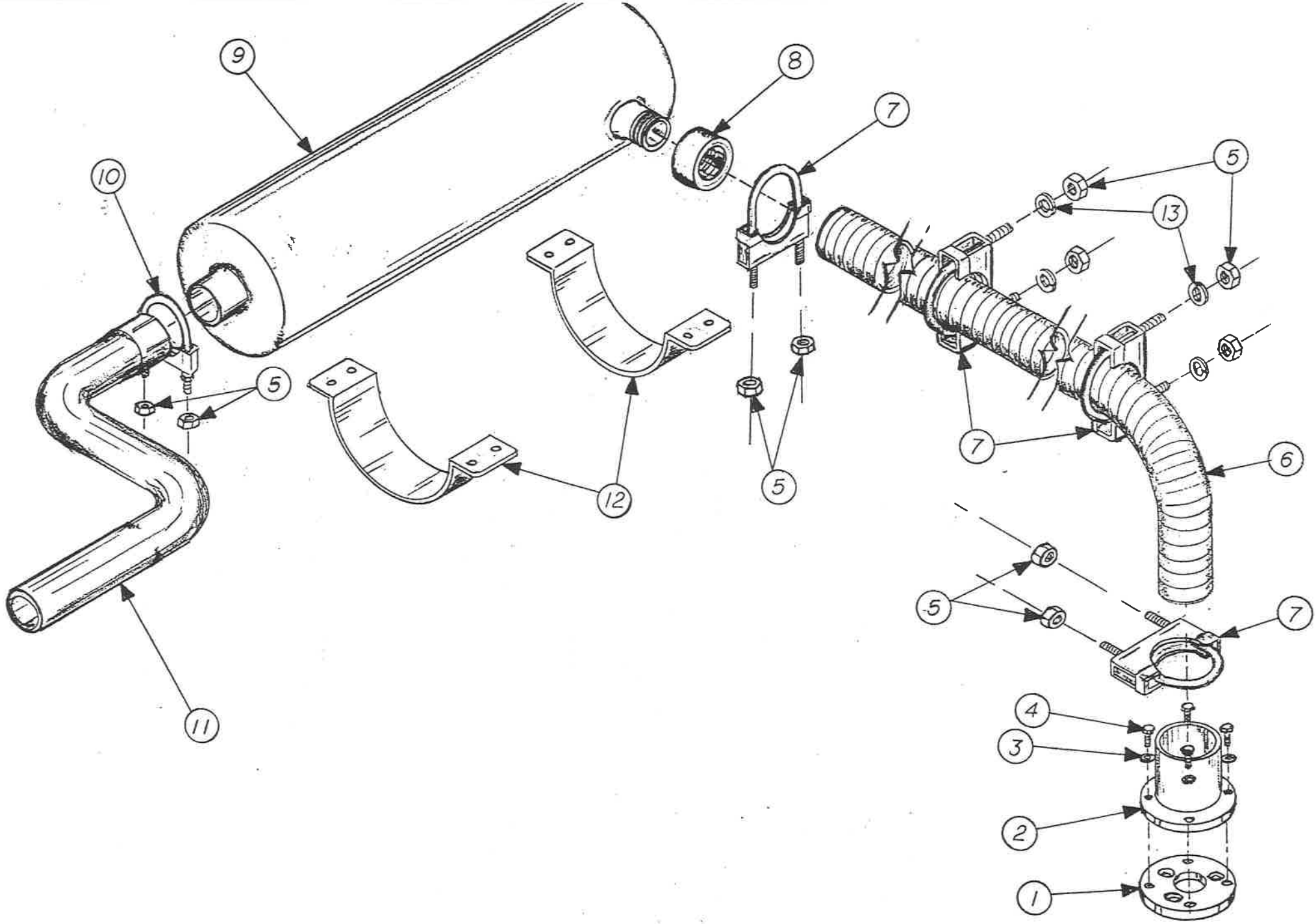
9
8
7
10
5
13
5
5
12
7
6
5
5
7
11
4
3
2
1

PARTS LIST

EXHAUST SYSTEM

Ref No.	Part No.	Description	Qty.
1	000564M	Flange, Exh Sys (Manifold)	1
2	000477W	Flange Wld, Exh Sys	1
3	000928P	Washer, Lock, 5/16	4
4	000921P	Bolt, 5/16-18 NC x 1	4
5	000953P	Nut, Lock, 3/8-16 NC	10
6	000585M	Flex Tube, Exhaust	1
7	000584P	Clamp-U, 3" Walker	4
8	000393P	Coupling, Half, 2" NPT, 3M# Blk	1
9	000371P	Muffler (Exhaust)	1
10	000387P	Clamp-U, 2-1/2"	1
11	000392M	Tail Spout (Exhaust)	1
12	000386W	Bracket/Clamp - 8" (Exhaust)	2
13	000955P	Washer, Lock, 3/8	4

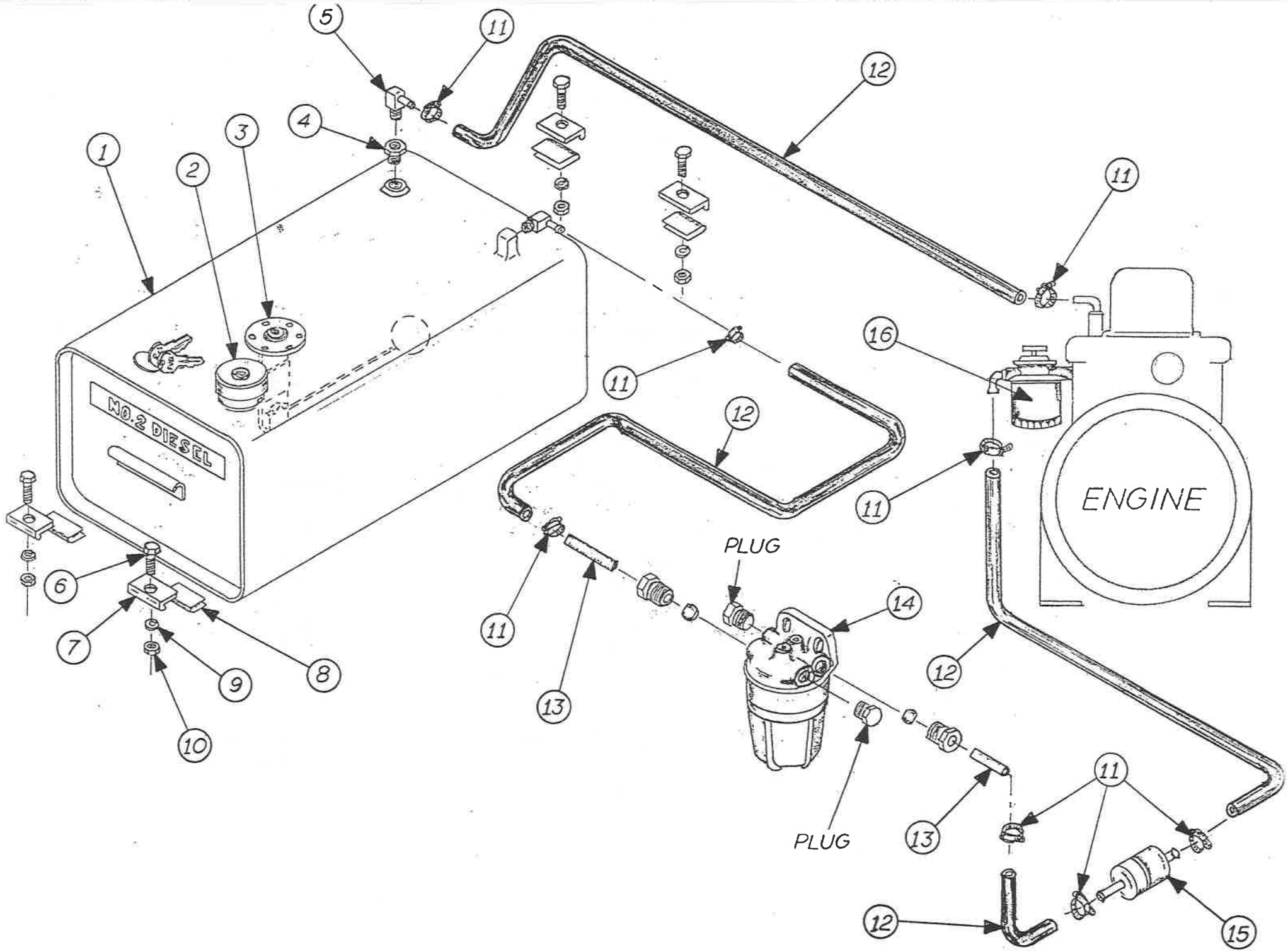
NO.2 DIESEL
ENGINE
PLUG
PLUG
1
2
3
4
5
6
7
8
9
10
11
12
13
14
15
16

PARTS LIST

FUEL SYSTEM

Ref No.	Part No.	Description	Qty
1	000535A	Tank, Fuel, Assy (18 gal) Includes #3	1
2*	000313P	Cap-Fuel, Locking UPDATED P/N: 71.P115960	1
3*	002096	Sender Assy, Fuel Level UPDATED P/N: 71.500533	1
4	F001309P	Adapter-PTR 3/8 x 1/4	1
5	000322P	Adapter, Brass Elbow	2
6	000948P	Bolt, 3/8-16 NC x 1-1/2"	4
7	002661	Hold Down, Fuel Tank	4
8	002662	Pad, Fuel Tank	4
9	000955P	Washer, Lock, 3/8"	4
10	000953P	Nut, Lock,, 3/8-16 NC	4
11	002071P	Clamp, Hose, Size 02	8
12	002089P	Hose, Fule Line, 5/16" I.D Specify Length When Ordering	
13	002094	Tubing, Fuel Line, Inlet	1
14	000133P	Filter, Water Separator	1
15	001704P	Filter, Fuel; In Line	1
	003507	Kit, Fuel Line Includes: #4,5,11,12,13,15	
16	000727P	Filter, Fuel 4.154/204-30	1

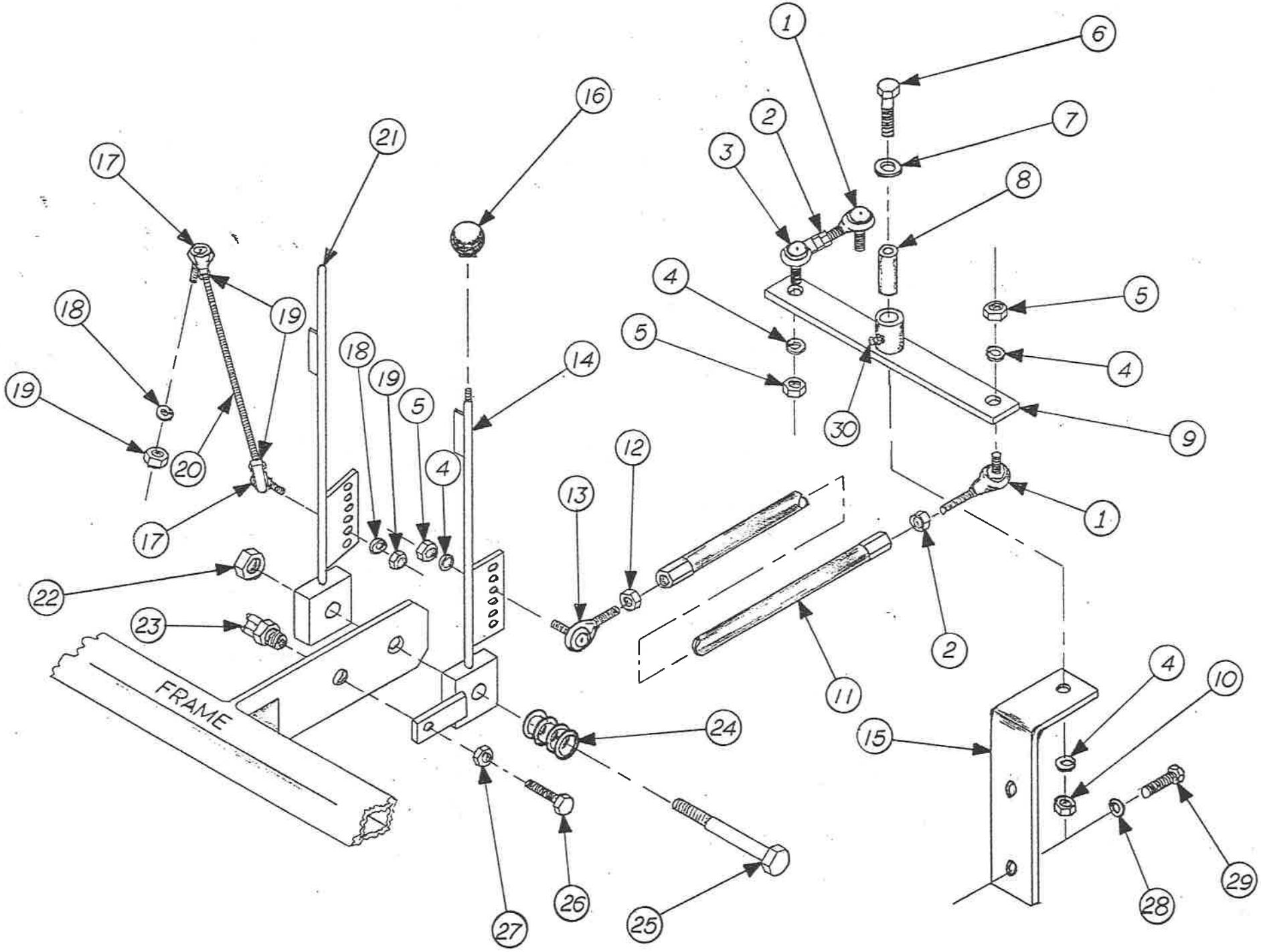
FRAME
1
2
3
4
5
6
7
8
9
10
11
12
13
14
15
16
17
18
19
20
21
22
23
24
25
26
27
28
29
30

PARTS LIST

THROTTLE AND TRANSMISSION LINKAGE

Ref No.	Part No.	Description	Qty.
1	000202P	Ball Joint, M W/Stud 3/8-24 R	2
2	000959P	Nut, Hex, 3/8-24 NF	2
3	001701P	Ball Joint, F W/Stud 3/8-24 R	1
4	000955P	Washer, Lock, 3/8"	5
5	000957P	Nut, Lock, 3/8-24 NF	4
6	000799P	Bolt, 3/8-16 NC x 3	1
7	001688P	Washer, Fender, 3/8	1
8	000734M	Spacer, Trans. Pivot	1
9	000733W	Linkage, Trans Pivot	1
10	000953P	Nut, Lock, 3/8-16 NC	1
11	000593W	Linkage Rod, Transmission	1
12	000958P	Nut, Hex, 3/8-24 NF LH	1
13	000201P	Ball Joint, M W/Stud 3/8-24 L	1
14	003467	Lever, Transmission, BC	1
15	003427	Brkt, Trans Pivot	1
16	003466P	Knob, Lever, 1.375 x 1/2-13	2
17	000688P	Ball Joint, F W/Stud 5/16-24 R	2
18	000928P	Washer, Lock, 5/16	2
19	000793P	Nut, Hex, 5/16-24 NF	4
20	003449	Rod, Linkage 5/16-24 x 16.25	1
	003440	Throttle Linkage Assy Includes: #17-#20	
21	002312	Lever Wld, Throttle	1
22	000932P	Nut, Lock, 5/8-11 NC	1
23	000092P	Switch, Netural Safety	1
24	002145	Spring, Control Lever	1
25	000998P	Bolt, 5/8-11 NC x 4-1/2	1
26	001687P	Bolt, 5/16-18 NC x 1-1/2 to HD.	1
27	000927P	Nut, Hex, 5/16-18 NC	1
28	003904P	Washer, Lock, M10	2
29	003908P	Bolt, M10-1.5 x 30 MM	2
30	000877P	Zerk, 1/4-28 NF Spin-Drive	1

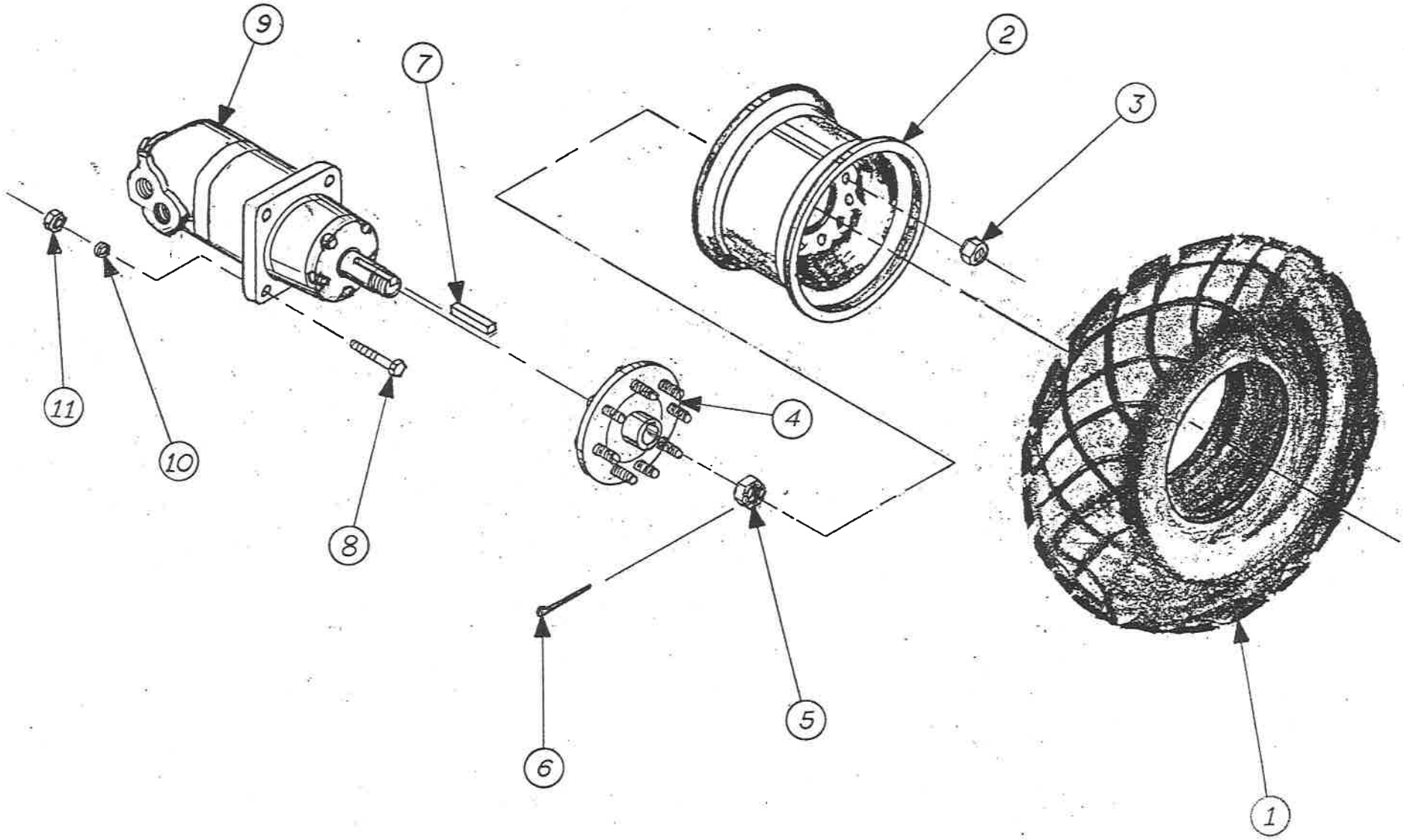
9
7
2
3
11
10
8
4
6
5
1

PARTS LIST

RIGHT WHEEL ASSEMBLY

Ref. No.	Part No.	Description	Qty.
1	000043P	Tire (13.6 x 16.1)	1
2	002241	Rim, 2-1/4" + Offset	1
	002239	Wheel Assy, Includes #1 & #2	1
3	002254P	Nut, Wheel 5/8-18	1
4	002253P	Stud, Wheel	1
	002255	Wheel Hub, 6M, 8 Stud Includes #3&#4	1
5	000020M	Nut, X-TRA Slotted-Wheel Mtr	1
6	000970P	Pin, Cotter, 1/8 x 3	1
7	000497M	Key, Wheel Mtr 4M & 6M Contoured	1
8	000985P	Bolt, 1/2-13 NC x 2	4
9 *	002118	Mtr, Wheel-6000 Series Includes #5 & #7	1
	000081P	Seal Kit, Shaft UPDATED P/N: 71.P354602	1
	000082P	Seal Kit, Rear UDATED P/N: 71.P354601	1
10	000990P	Washer, Lock, 1/2	4
11	000988P	Nut, Lock, 1/2-13 NC	4

* #9 WHEEL MOTOR ADDITIONAL ITEM
71.P354603 SHAFT SEAL GUARD

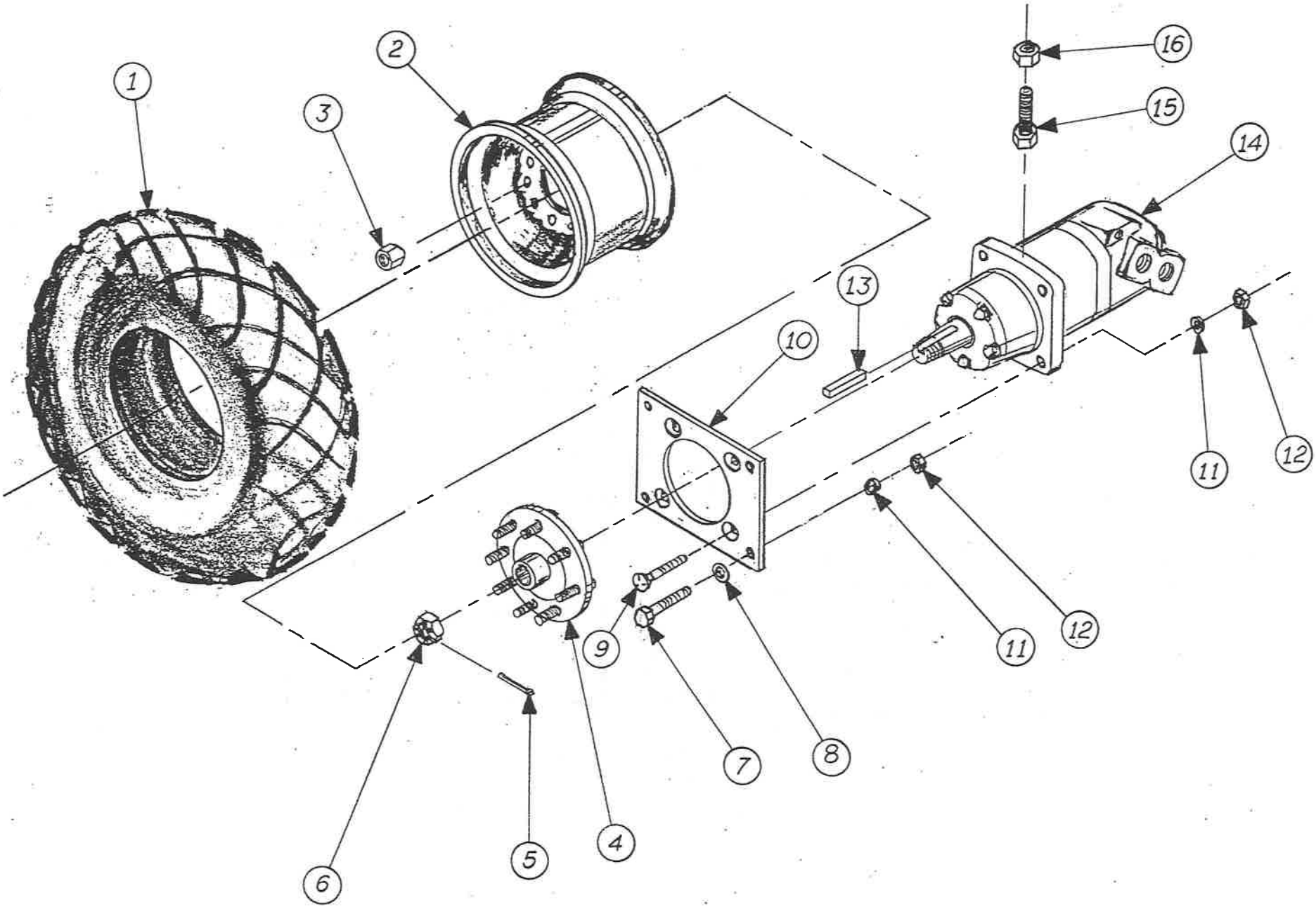
1
2
3
4
5
6
7
8
9
10
11
11
12
12
13
14
15
16

PARTS LIST

LEFT WHEEL ASSEMBLY

Ref No.	Part No.	Description	Qty
1	000043P	Tire (13.6 x 16.1)	1
2	002241	Rim, 2-1/4" + Offset	1
	002239	Wheel Assy (Includes #1 & #2)	1
3	002254P	Nut, Wheel 5/8-18	8
4	002253P	Stud, Wheel	8
	002255	Wheel Hub, 6M, 8 Stud (Includes #3 & #4)	1
5	000970P	Pin, Cotter, 1/8 x 3	1
6	000020M	Nut, X-TRA Slotted Whl Mtr	1
7	000985P	Bolt, 1/2-13 NC x 2"	4
8	000991P	Washer, Flat, 1/2"	4
9	000992P	Bolt, Plow, 1/2-13 NC x 2"	4
10	000463M	Plate, Adj. Wheel Motor Mt.	1
11	000990P	Washer, Lock, 1/2"	8
12	000988P	Nut, Lock, 1/2-13 NC	8
13	000497M	Key-Wheel Motor 4M&6M Contoured	1
14*	002118	Motor, Wheel- 6000 Series (Includes #6 & #13)	1
	000082P	Seal Kit, Rear UPDATED P/N: 71.P354601	1
	000081P	Seal Kit, Shaft UPDATED P/N: 71.P354602	1
15	000301W	Bolt, Wheel Motor Adj.	1
16	000934P	Nut, Jam 5/8-11 NC	1

* #14 WHEEL MOTOR ADDITIONAL ITEM
71.P354603 SHAFT SEAL GUARD

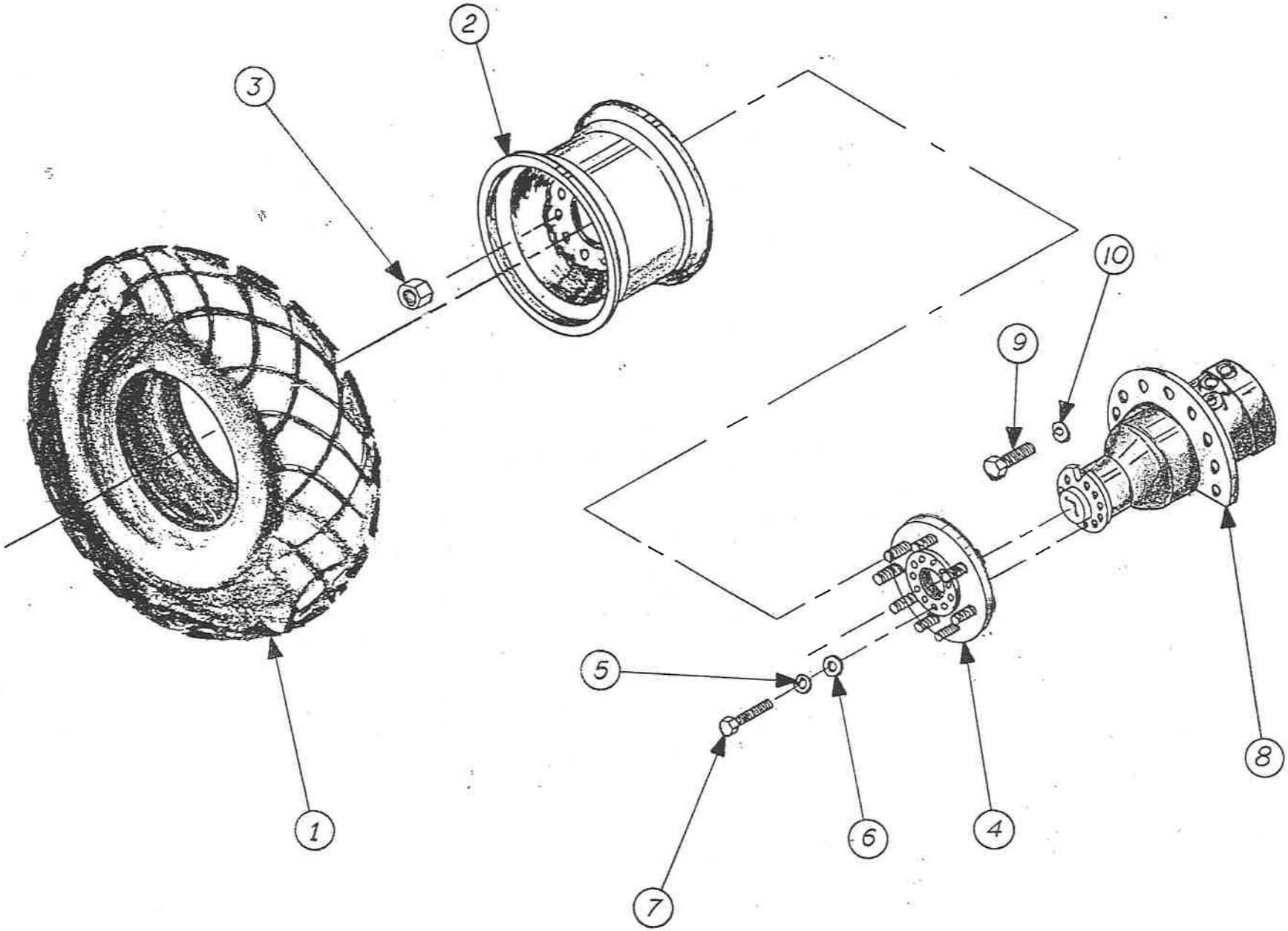
1
2
3
4
5
6
7
8
9
10

PARTS LIST

FRONT WHEEL ASSEMBLY

Ref. No.	Part No.	Description	Qty.
1	000043P	Tire (13.6 x 16.1)	1
2	002241	Rim, 2-1/4" + Offset	1
	002239	Wheel Assy (Includes #1 & #2)	1
3	002254P	Nut, Wheel 5/8-18	8
4	002253P	Stud, Wheel	8
	002957	Wheel Hub, Poclain (Includes #3 & #4)	1
5	002141P	Washer, Lock, M14	11
6	002140P	Washer, Flat, M14	11
7	002139P	Bolt, M14 x 50 MM	11
8	002138	Brake/Mtr- Poclain	1
9	000994P	Bolt, 5/8-11 NC x 1-3/4"	10
10	000935P	Washer, Lock, 5/8"	10

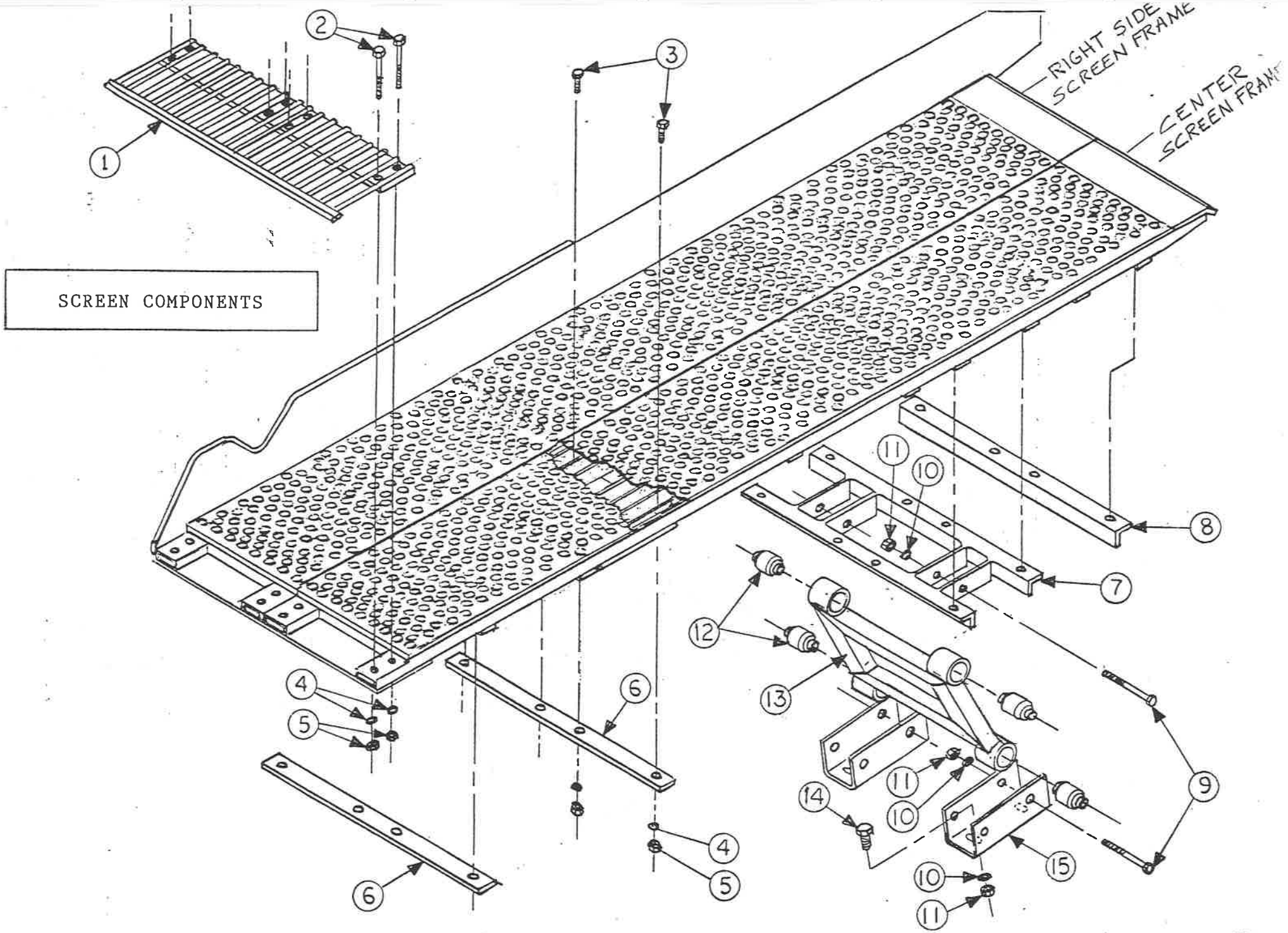
SCREEN COMPONENTS
RIGHT SIDE SCREEN FRAME
CENTER SCREEN FRAME
1
2
3
4
5
6
7
8
9
10
11
12
13
14
15

PARTS LIST

SCREEN COMPONENTS

(TYPICAL FOR LEFT/CENTER AND RIGHT/CENTER SCREEN FRAMES)

Ref No.	Part No.	Description	Qty.
1*	000304W	Digger Point Wld-STD	1
2	000950P	Bolt, 3/8-16 NC x 2-1/4	8
3	000947P	Bolt, 3/8-16 NC x 1-1/4	20
4	000955P	Washer, Lock, 3/8	28
5	000953P	Nut, Lock, 3/8-16 NC	28
6	002876	Screen Tie Flat	2
7	002050	Bracket, Riser to Screen	1
8	002289	Screen Tie Angle	1
9	000987P	Bolt, 1/2-13 NC x 4	4
10	000990P	Washer, Lock, 1/2	8
11	000988P	Nut, Lock, 1/2-13 NC	8
12	002057P	Bushing, Rubber	4
13	002051	Riser, Rear Scrn	1
14	000982P	Bolt, 1/2-13 NC x 1-1/4	2
15	002134	Clevis, Rear Screen	2

*OPTIONAL SOLID DIGGER POINT P/N 71.000330W QTY 2 REQD

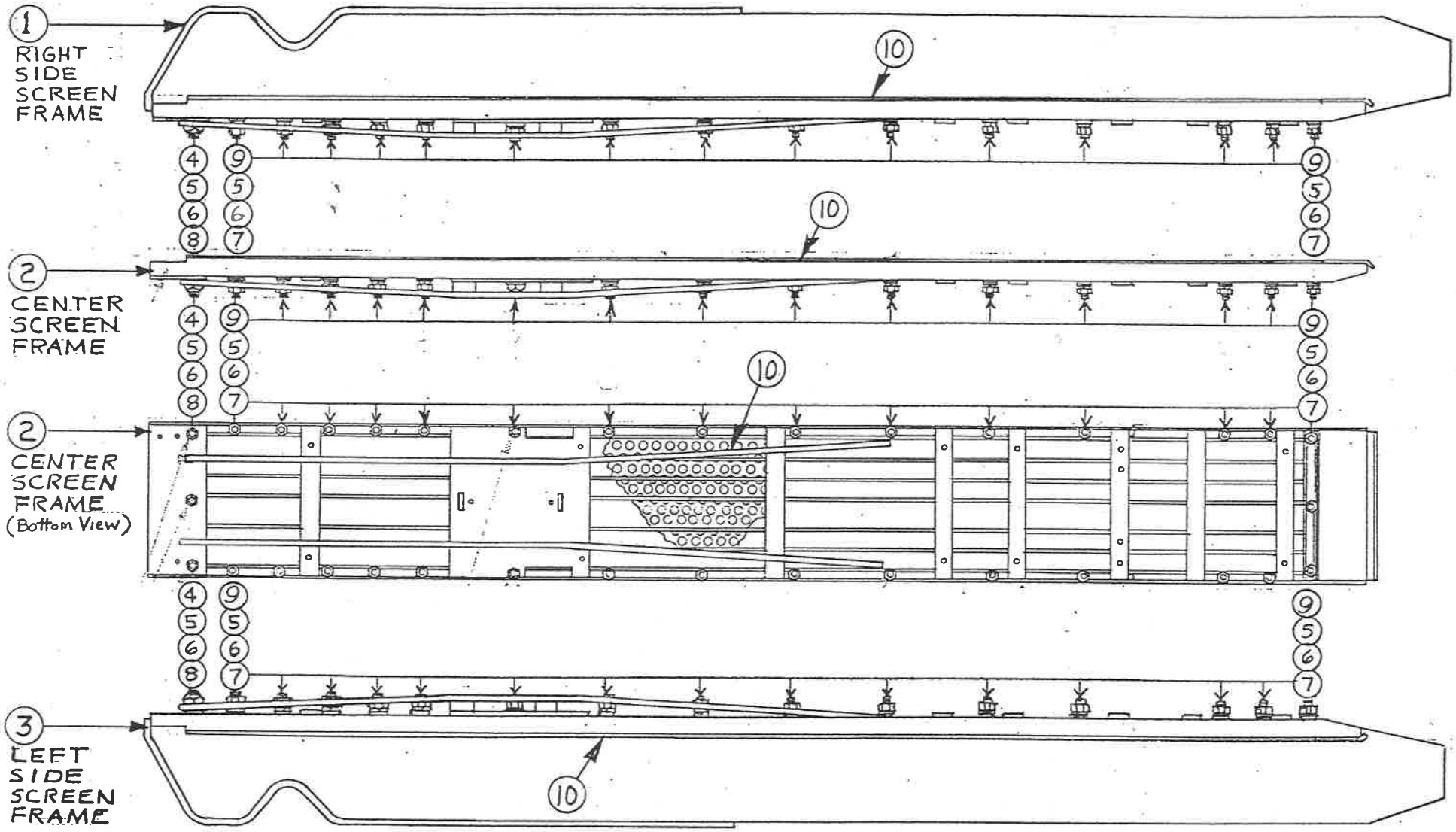
1
RIGHT SIDE SCREEN FRAME
2
CENTER SCREEN FRAME
2
CENTER SCREEN FRAME (Bottom View)
3
LEFT SIDE SCREEN FRAME
10
10
10
10
4
5
6
8
9
5
6
7
9
5
6
7

PARTS LIST

SCREEN INSTALLATION

Ref No.	Part No.	Description	Qty
1	002972	Screen Frame, Right	1
2	002970	Screen Frame, Center	2
3	002971	Screen Frame, Left	1
4	000913P	Bolt, Plow, 3/8-16 NC x 2-3/4	3
5	000961P	Washer, Flat, 3/8	34
6	000955P	Washer, Lock, 3/8	34
7	000960P	Nut, Hex, 3/8-16 NC	31
8	000953P	Nut, Lock, 3/8-16 NC	3
9	001010P	Bolt, Plow, 3/8-16 NC x 2-1/4	31
10	000055M	Screen - 7 ga. (3/4" Holes)	
	002975	Screen Assy, RS Includes: #1 & #4-#10	1
	002973	Screen Assy, Center Includes: #2 (Qty.1) & #4-#10	2
	002974	Screen Assy, LS Includes: #3-#10	1

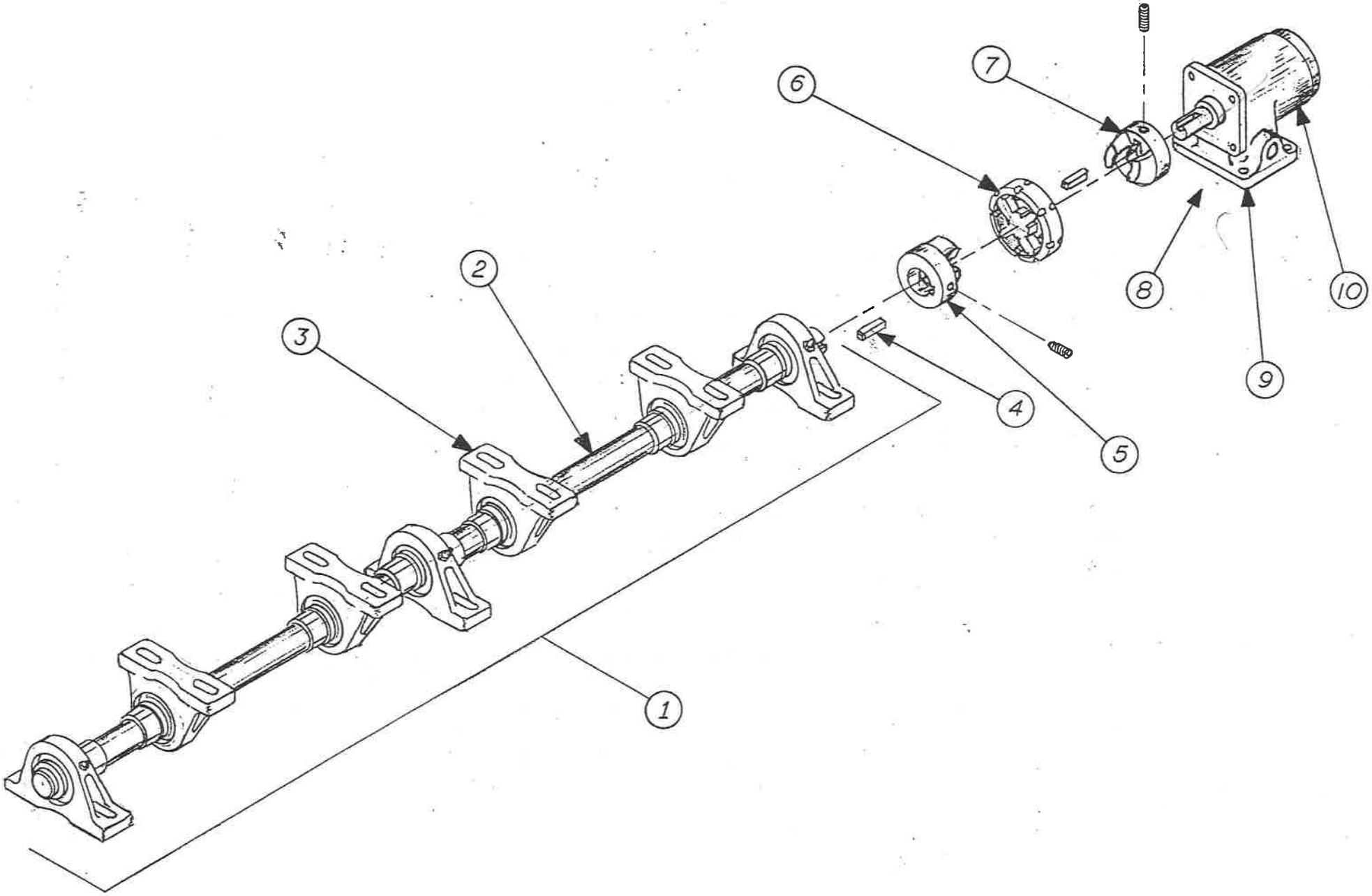
1
2
3
4
5
6
7
8
9
10

PARTS LIST

OSCILLATOR MECHANISM

Ref No.	Part No.	Description	Qty.
1	002065A	Shaft Assembly, Oscillator Includes #2 & #3	1
2	002065SA	Shaft Assy, Osc Sub	1
3	000691M	Bearing, Osc, 2" Sealmaster	7
4	000067M	Key, Oscillator Coupling	1
5*	000145M	Coupling Half, Flex, 1-1/2" Bore Includes:	1
	000966P	Set Screw, 7/16-14 NC x 1/2"	1
6*	000142P	Coupling Insert, Flex Rubber	1
7*	000140M	Coupling Half, Flex, 1" Bore Includes:	1
	000968P	Set Screw, 7/16-14 NC x 3/4	1
8	003457	Mtr Assy, Osc (1017) Includes: #9 & #10	1
9	000255P	Base Block, C/l #123-1008	1
10	003471P	Mtr, C/L #101-1017 Includes:	1
	000057P	Key, Woodruff 1/4 x 1 No. 15	1

* 71.P272900 COMPLETE COUPLER ASSEMBLY (INCLUDES #5, #6 ,#7 AND SET SCREWS)

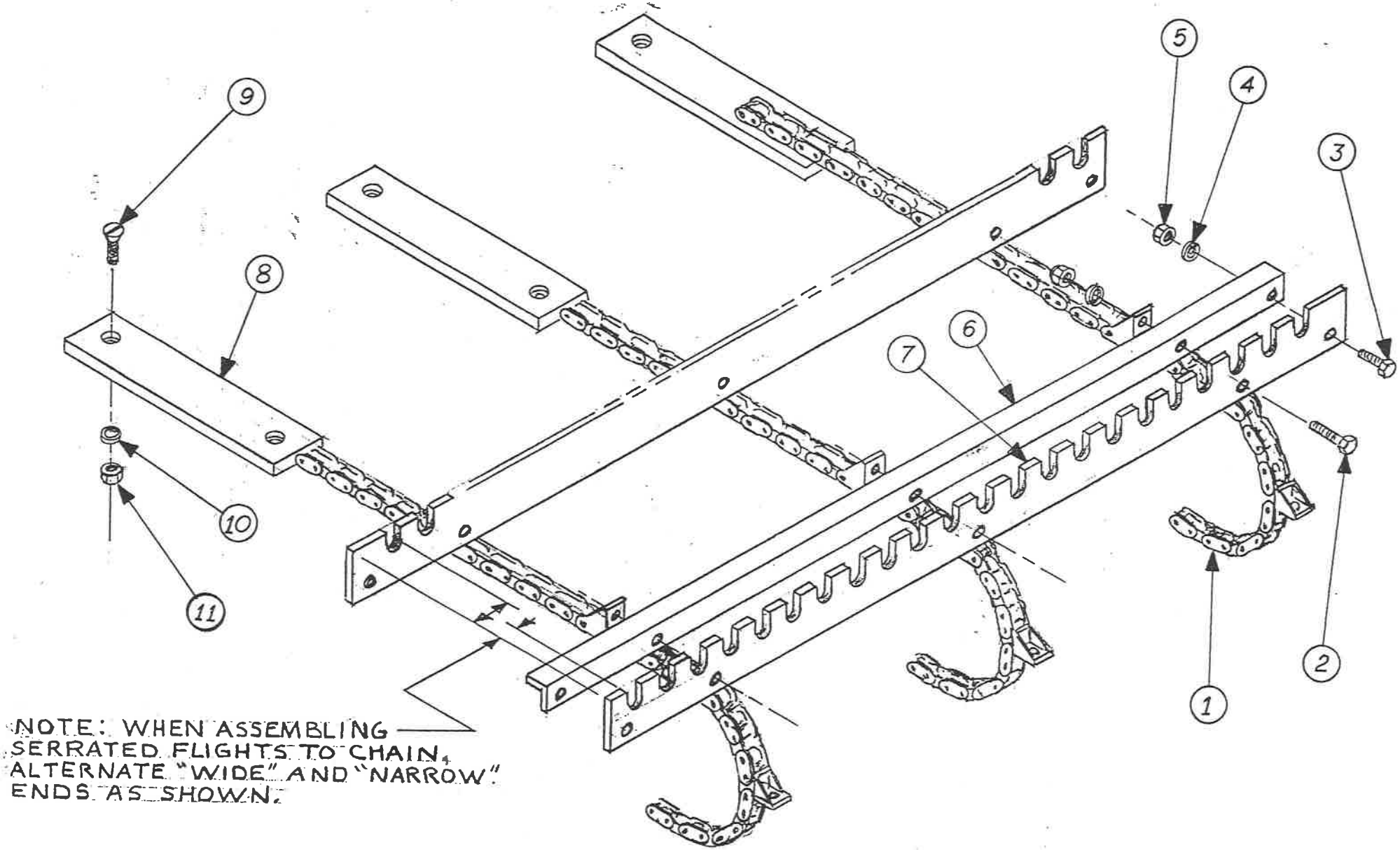
9
8
10
11
5
4
3
7
6
2
1
NOTE: WHEN ASSEMBLING
SERRATED FLIGHTS TO CHAIN,
ALTERNATE "WIDE" AND "NARROW"
ENDS AS SHOWN.

PARTS LIST

FLIGHT SYSTEM

Ref No.	Part No.	Description	Qty.
1	000285M	Chain, #620 Conveyor *SEE NOTE BELOW	3
		Includes:	
	002230	Chain Link, #620 HC 11 Attachment	26
	000282P	Chain Link, #620 Connector	1
	000283P	Chain Link, #620 Offset	3
2	000947P	Bolt, 3/8-16 NC x 1-1/4	78
3	000946P	Bolt, 3/8-16 NC x 1	52
4	000955P	Washer, Lock, 3/8	130
5	000953P	Nut, Lock, 3/8-16 NC	130
6	000053M	Flight Mounting Angle	26
7	000052M	Flight Blade, Serr 2-1/4"	26
	000287M	Flight Blade, Plastic (Optional)	26
8	000271M	Wear Strip, Conveyor	6
9	000924P	Bolt, 5/16 x 1 Flat Hd.	12
10	000928P	Washer, Lock, 5/16	12
11	000927P	Nut, Hex, 5/16-18 NC	12

* UPDATED CONVEYOR CHAIN #620 - 26 CLEATS P/N: 71.P632820

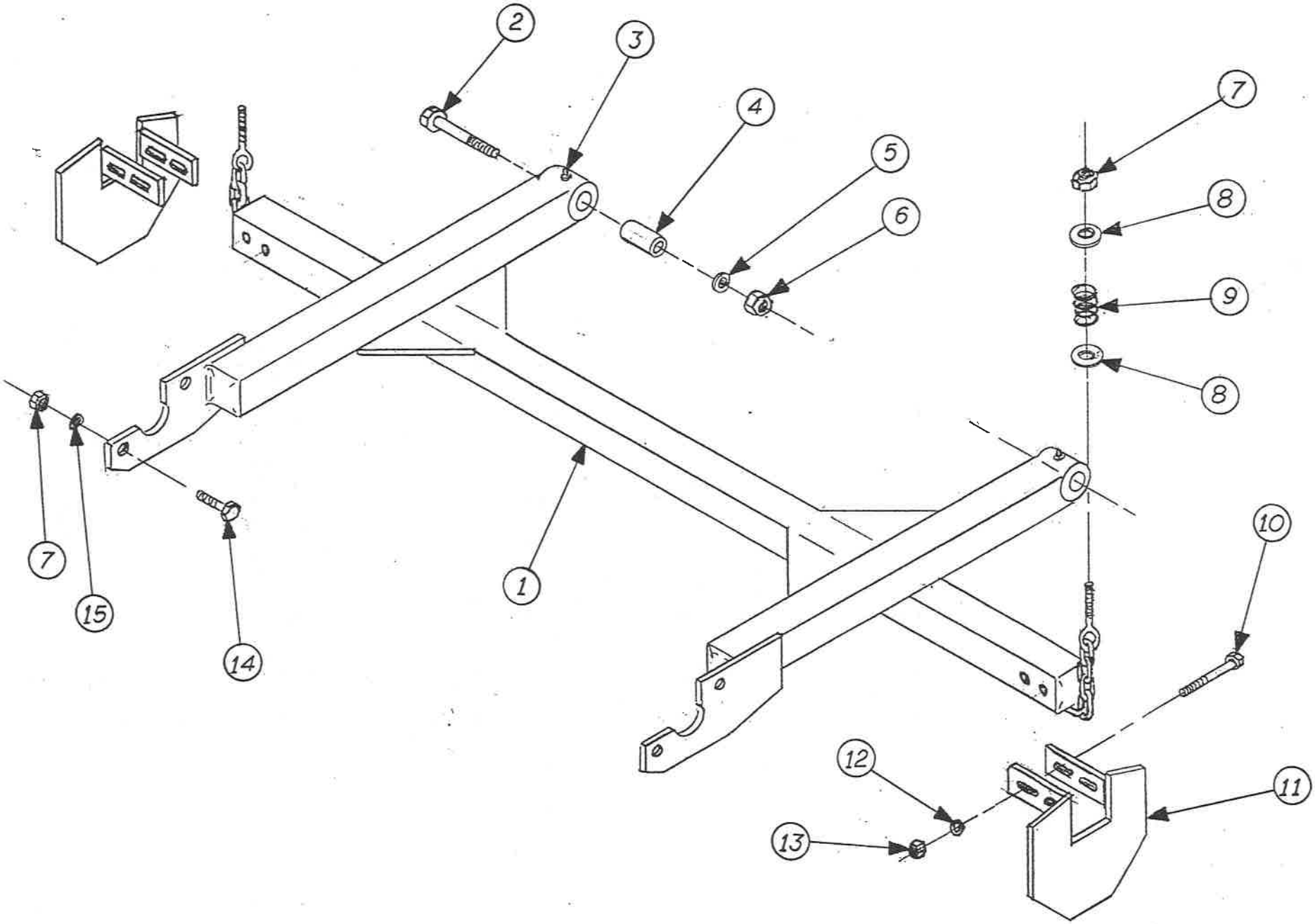
2
3
4
5
6
7
8
9
8
7
15
14
1
10
12
13
11

PARTS LIST

CONVEYOR SUPPORT ASSEMBLY

Ref No.	Part No.	Description	Qty.
1	003046	Conveyor Support	1
2	000997P	Bolt, 5/8-11 NC x 4 Grd. 8	2
3	000876P	Zerk, 1/8 NPT Spin Drive	2
4	000026M	Spacer, Stabilizer (2-1/16")	2
5	000935P	Washer, Lock, 5/8"	2
6	000932P	Nut, Lock, 5/8-11 NC	2
7	000988P	Nut, Lock, 1/2-13 NC	6
8	000991P	Washer, Flat, 1/2"	4
9	002122	Spring, Front Conveyor Support	2
10	000799P	Bolt, 3/8-16 NC x 3	4
11	000704W	Spill Plate Wld	2
12	000955P	Washer, Lock, 3/8"	4
13	000953P	Nut, Lock, 3/8-16 NC	4
14	000984P	Bolt, 1/2-13 NC x 1-3/4	4
15	000990P	Washer, Lock, 1/2"	4

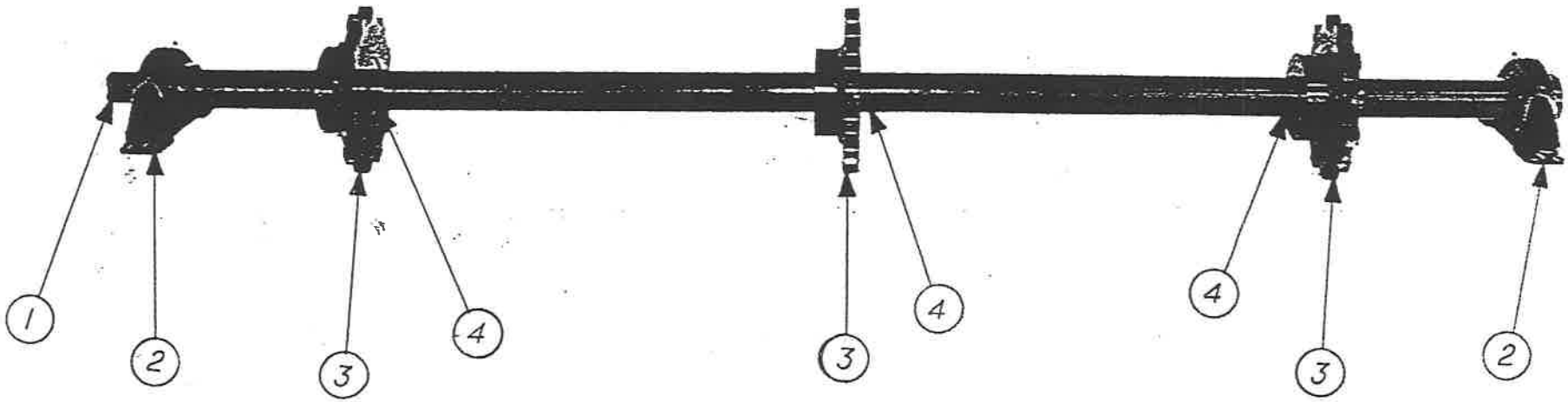
1
2
3
4
3
4
4
3
2

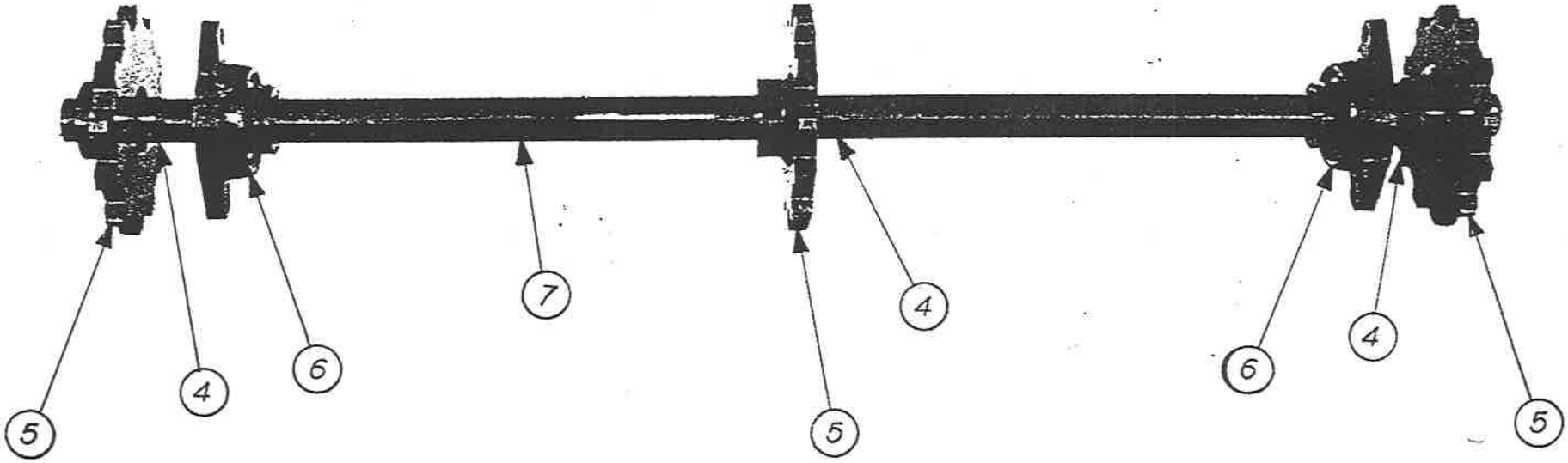
5
4
6
7
5
4
6
4
5

PARTS LIST

CONVEYOR SHAFT ASSEMBLIES, FRONT & REAR

Ref No.	Part No.	Description	Qty.
1	000454M	Shaft, Rear Conv (1-3/4")	1
2	000279P	Bearing, Fafnir 1-7/16" TAK PB	2
3	000324W	Sprocket, 620 12T 1-3/4 B	3
4	000328M	Key, Conveyor Shaft	3
	000454A	Shaft, Assy, Rear Conveyor Includes: #1 - #4	1
5	000257W	Sprocket, 620 12T 1-7/16 B	3
6	000277P	Bearing 1-7/16" Flange	2
7	000272M	Shaft, Fr Conv.	1
	000272A	Shaft Assy, Fr Conv. Includes: #4 - # 7	1

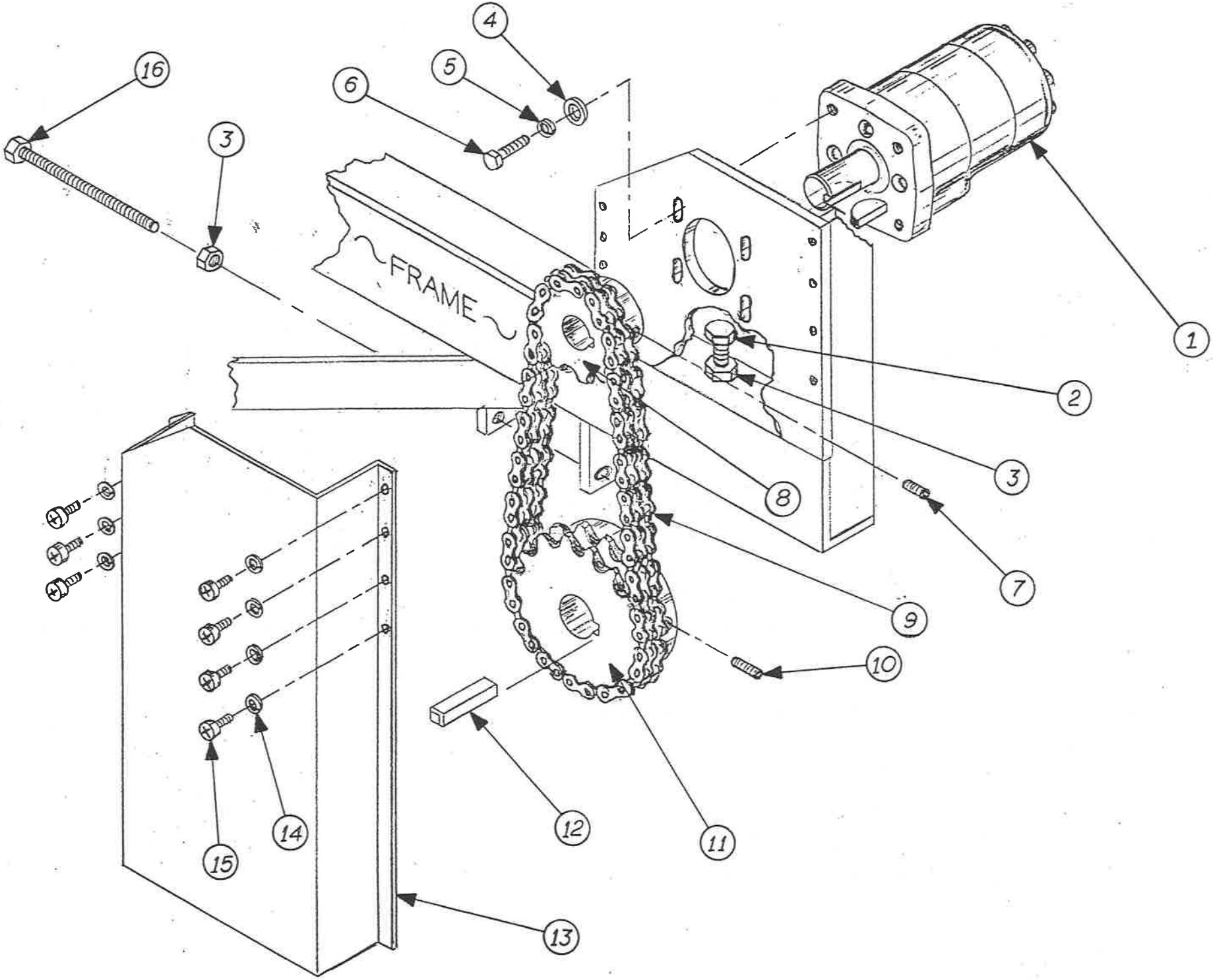
FRAME
1
2
3
4
5
6
7
8
9
10
11
12
13
14
15
16

PARTS LIST

CONVEYOR DRIVE MECHANISM

Ref No.	Part No.	Description	Qty.
1	003456	Mtr, Conv (1751)	1
		Includes:	
	000057P	Key, Woodruff 1/4 x 1 No. 15	1
2	000985P	Bolt, 1/2"-13 NC x 2	1
3	000989P	Nut, 1/2"-13 NC	3
4	000956P	Washer, Flat, 3/8"	4
5	000955P	Washer, Lock, 3/8	4
6	000946P	Bolt, 3/8-16 NC x 1	4
7	000964P	Set Screw, 3/8-16 NC x 3/8	1
8	000511M	Sprocket, D50 13 T 1 B	1
9	002175	Chain, #50 Double	1
		Includes:	
	000764P	Chain Link, #50-2 Connector	1
10	000965P	Set Screw 3/8-16 NC x 3/4	1
11	000512M	Sprocket, D50 23 T 1-7/16 B	1
12	000534M	Key, Conv Sprocket - Driven	1
13	000716W	Guard, Conv Mtr Chain	1
14	000917P	Washer, Lock, 3/16	7
15	001690P	Screw, Tapping, #10-32 x 1/2	7
16	000374W	Bolt, Rear Shaft Adj.	2

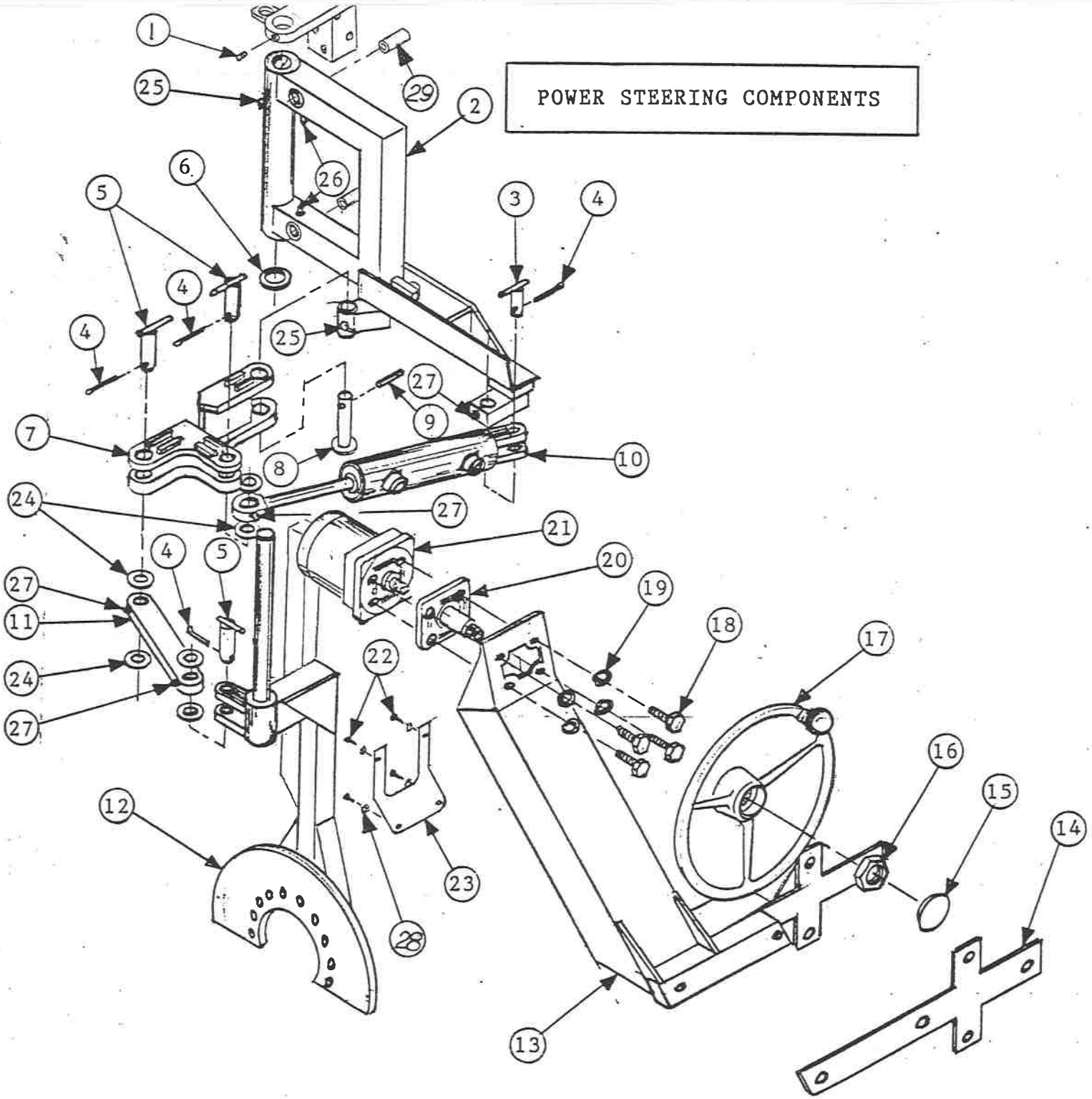
POWER STEERING COMPONENTS
1
2
3
4
5
6
7
8
9
10
11
12
13
14
15
16
17
18
19
20
21
22
23
24
25
26
27
28
29

PARTS LIST

POWER STEERING COMPONENTS

Ref No.	Part No.	Description	Qty.
1	000966P	Set Screw, 7/16-14 NC x 1/2	1
2	003014	Spindle Column Wld	1
3	000561W	Pin, P.S. Short	1
4	001689P	Pin, Cotter, 3/16 x 2 ZP	4
5	000556W	Pin, P.S. Long	3
6	000006M	Washer, Fork, 2"	1
7	000551W	Radius Arm, P.S.	1
8	000126W	Pin, P.S. Rad Arm	1
9	000972P	Pin, Spring, 3/8 x 2	1
10	003038	Cyl Assy, P.S.	1
		Includes:	
	000562W	Cylinder-Power Steering	1
	003036	Rod End, P.S. Cylinder	1
	000788P	Nut, Jam, 3/4-16 ZP	1
	*000562P	Seal Kit, Cyl, PS, 2-1/2" Bore	1
11	003035	Linkage Bar, P.S.	1
12	002881	Fork Wld, Poclain	1
13	002449	Steering Post	1
14	000684W	Retainer, Steering Post	1
15	000058P	Cap, Steering Wheel	1
16	000111P	Nut, Steering Wheel	1
17	000110P	Steering Wheel	1
		Includes: #15	
18	000946P	Bolt, 3/8-16 NC x 1	1
19	000955P	Washer, Lock, 3/8	4
20	002124	Steering Column	1
21	002125	Mtr, P.S. (1008)	1
22	001690P	Screw, Tapping, #10-32 x 1/2	4
23	000706M	Shield, Steering Post	1
24	002163P	Shim, 1 x 1-1/2 x .062"	6
25	000876P	Zerk, 1/8" NPT Spin-Drive	3
26	000402P	Zerk, 1/8" NPT, 5007, 1-3/4 OAL	2
27	000877P	Zerk, 1/4-28 NF, Spin-Drive	4
28	000917P	Washer, Lock, 3/16	4
29	000483M	Spacer, Stabilizer 3-1/4"	2

*000562W SEAL KIT UPDATED P/N: 71.P259901

HOPPER COMPONENTS

AND

ROLLOVER MECHANISM

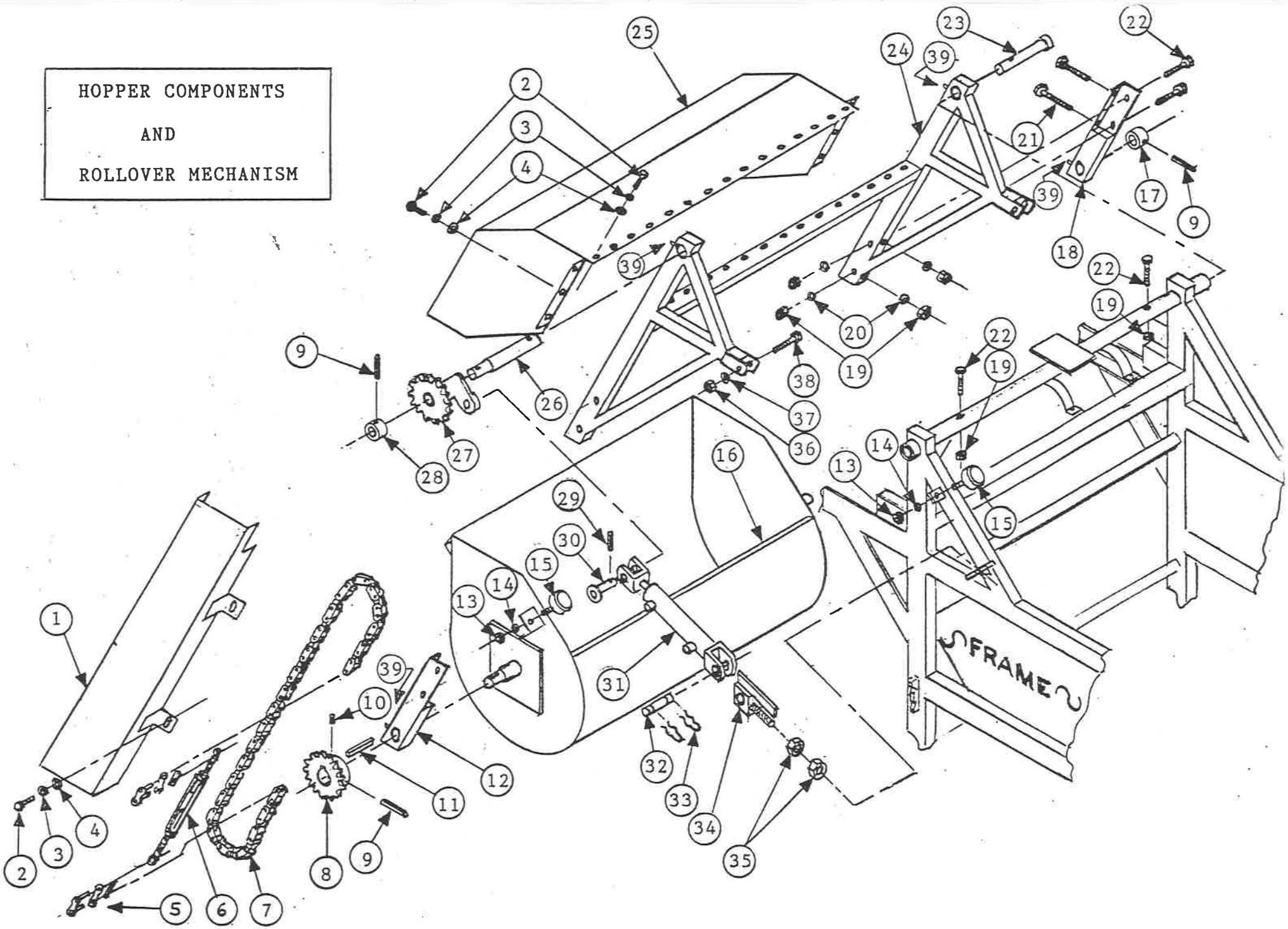

PARTS LIST

HOPPER COMPONENTS AND ROLLOVER MECHANISM

Ref No.	Part No.	Description	Qty
1	002279	Guard, R/O Chain	1
2	000900P	Bolt, 1/4-20 NC x 3/4	27
3	000909P	Washer, Lock, 1/4	27
4	000910P	Washer, Flat, 1/4	27
5	000284P	Chain Link, #80 Connector	2
6	000268A	Turnbuckle Assy	1
7	000266M	Chain, #80, Rollover Hopper Includes: #5	1
8	000267W	Sprocket, Hopper-Driven 16T	1
9	000971P	Pin, Spring, 3/8 x 2-1/2	3
10	000792P	Set Screw, 3/8-16 NC x 1/4	1
11	000069M	Key, Hopper Sprocket	1
12	003019	Boom Arm Wld, RH Detachable	1
13	000953P	Nut, Lock, 3/8	2
14	000955P	Washer, Lock, 3/8	2
15	000358M	Stop, Rubber	2
16	000238W	Hopper Wld	1
17	000365M	Collar, Retaining, Hopper	1
18	003018	Boom Arm Wld, LH Detachable	1
19	000988P	Nut, Lock, 1/2-13 NC	10
20	000990P	Washer, Lock, 1/2	8
21	000987P	Bolt, 1/2-13 NC x 4	4
22	000986P	Bolt, 1/2-13 NC x 3	6
23	000243W	Boom Swivel Wld, L.H.	1
24	003022	Boom Weldment	1
25	000124W	Hood Wld	1
26	000292M	Boom Swivel - R.H.	1
27	0003032	Crank, Hopper	1
28	000274M	Collar, Retaining, Hopper Crank	1
29	000972P	Pin, Spring 3/8 x 2	2
30	000550W	Pin, Rollover Cylinder	1
31	002143	Cylinder, Hopper	1
	*000397P	Seal Kit, Hopper Cyl	1
32	000359P	Pin, Clevis (1")	1
33	000349P	Clip, Clevis Pin	2
34	000240W	Adj. Base, Hopper Cylinder	1
35	000939P	Nut, Hex, 3/4-10 NC	2
36	000932P	Nut, Lock, 5/8-11 NC	2
37	000935P	Washer, Lock, 5/8	2
38	000366M	Pin, Clevis (5/8" Bolt)	2
39	000401P	Zerk, 1/8 NPT, 5003, 1-1/4 OAL	4

*000397P SEAL KIT UPDATED P/N: 71.P259090

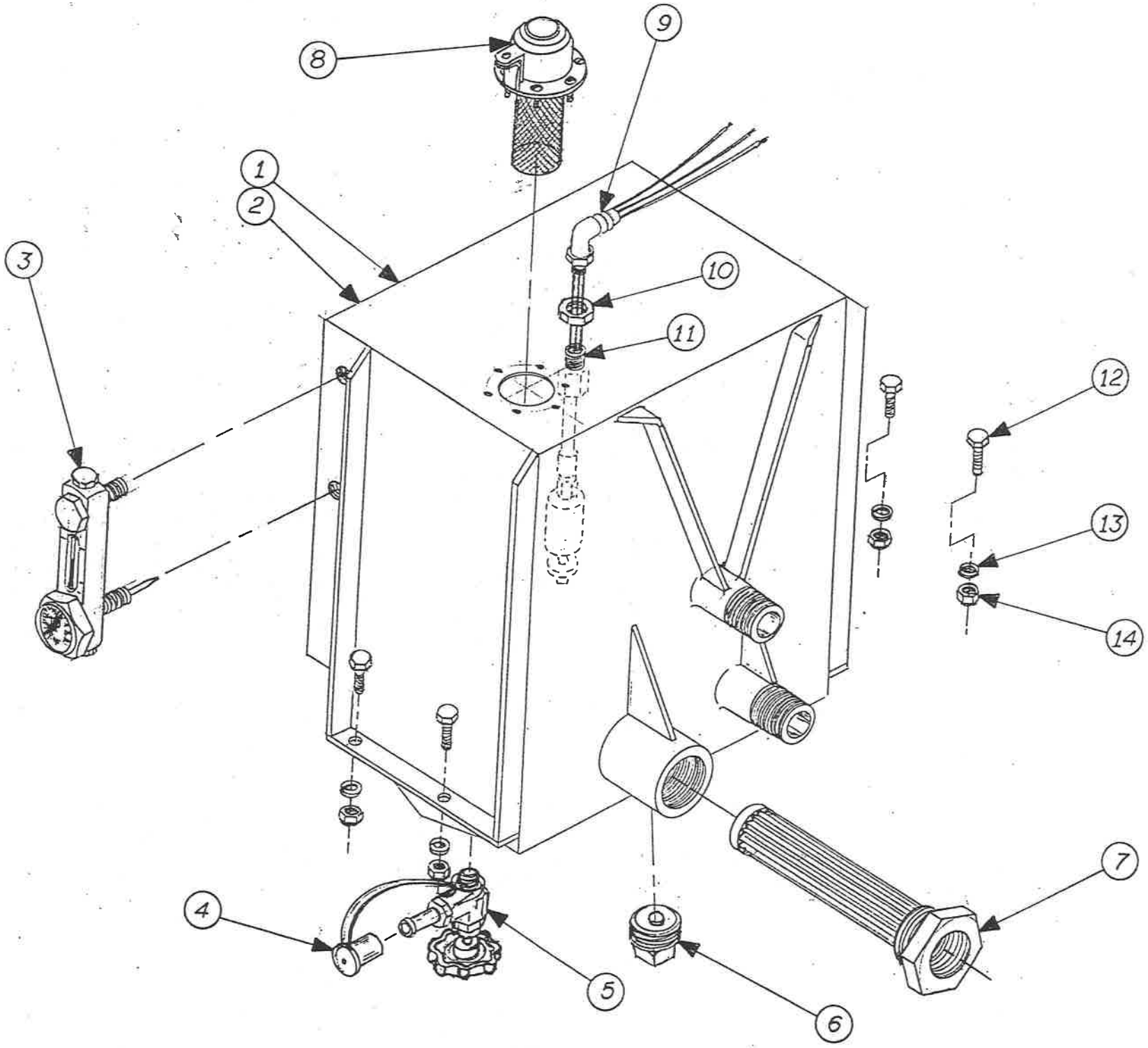
1
2
3
4
5
6
7
8
9
10
11
12
13
14

PARTS LIST

OIL TANK ASSEMBLY

Ref No.	Part No.	Description	Qty.
1	002664	Tank, Hyd Oil 12 Gal, Assy Includes: #2-#5	1
2	002665	Tank, Hyd, 12 Gal S/A Includes: #6-#11	1
3	000176P	Gauge, Oil Sight	1
4	002085P	Cap, Dust, Oil Tank Drain	1
5	000109P	Valve, Oil Tank Drain	1
6	000059P	Plug, Magnetic Drain 1-1/2"	1
7	000184P	Strainer, Hyd Oil	1
8	000174P	Filler/Breather Kit	1
9	000683P	Elbow, Plastic	1
10	000788P	Nut, Jam, 3/4-16 NF	1
11	001784A	Sender Assy, Hyd Lev/Temp	1
12	000947P	Bolt, 3/8-16 NC x 1-1/4	4
13	000955P	Washer, Lock, 3/8	4
14	000953P	Nut, Lock, 3/8-16 NC	4

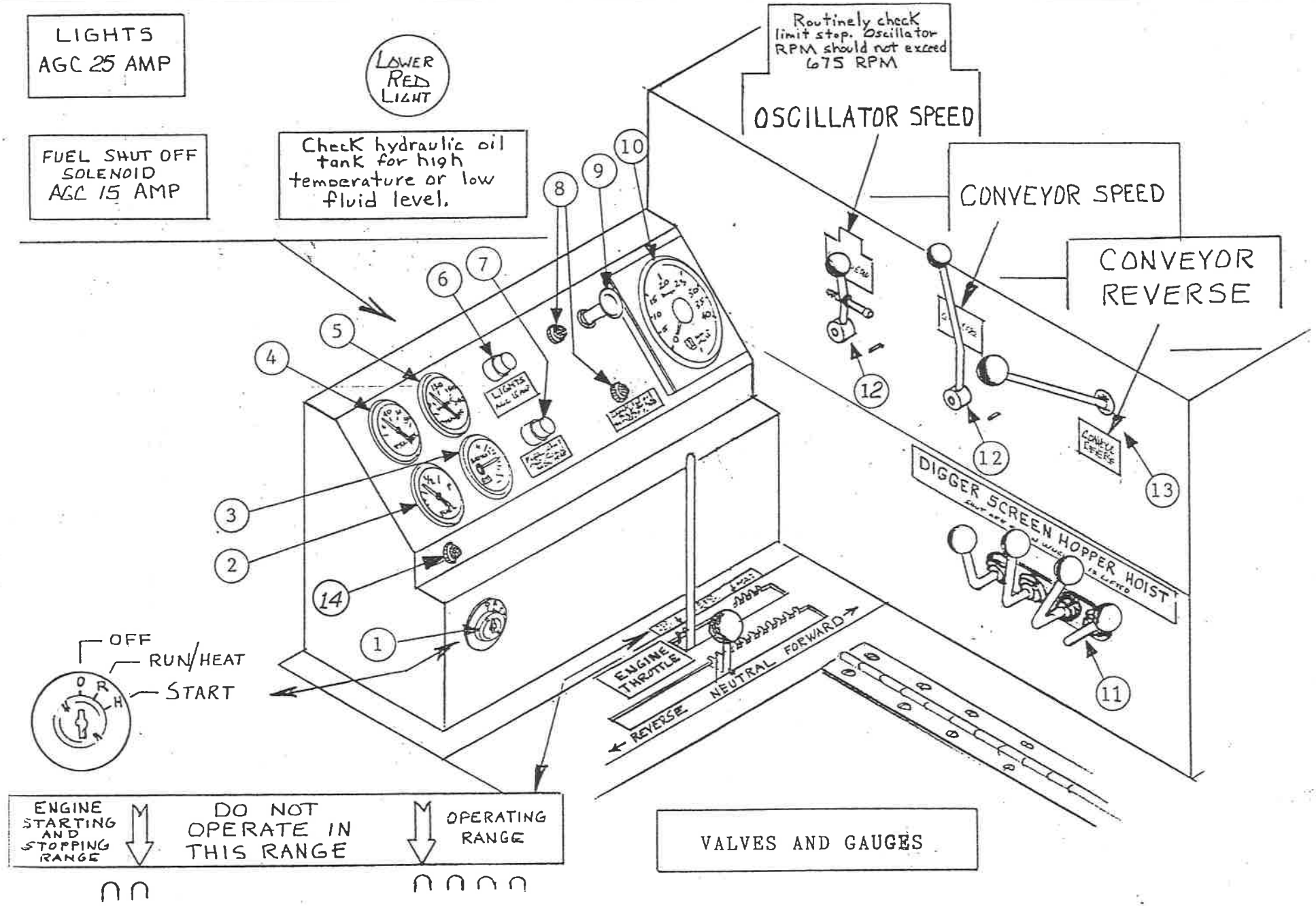
LIGHTS
AGC 25 AMP
FUEL SHUT OFF SOLENOID
AGC 15 AMP
LOWER RED LIGHT
Check hydraulic oil tank for high temperature or low fluid level.
Routinely check limit stop. Oscillator RPM should not exceed 675 RPM
OSCILLATOR SPEED
CONVEYOR SPEED
CONVEYOR REVERSE
DIGGER SCREEN HOPPER HOIST
ENGINE THROTTLE
REVERSE
NEUTRAL
FORWARD
OFF
RUN/HEAT
START
ENGINE STARTING AND STOPPING RANGE
DO NOT OPERATE IN THIS RANGE
OPERATING RANGE
VALVES AND GAUGES
1
2
3
4
5
6
7
8
9
10
11
12
12
13
14

PARTS LIST
VALVES AND GAUGES

Ref No.	Part No.	UPDATED P/N	Description	Qty
1	003472P	71.P298125	Switch, Ign 3 Position	1
2	000515P		Gauge, Fuel Tank	1
3	002199P		Gauge, Voltmeter	1
4	000102P		Gauge, Engine Oil Pressure	1
5	000103P		Gauge, Water Temperature	1
6	002444		Fuseholder, Ring/Spade	1
7	002443		Fuseholder, Ring/Butt	1
8	000089P		Light, Pilot	2
9	000091P		Switch, Light	1
10	003450P		Gauge, Tach/Hourmeter (Datcon)	1
11	000514A		Valve Bank Assy	1
12	002291		Valve, Flow Control	2
13	002131		Valve, Conveyor Reverse	1
14	003458P		Light, Indicator	1

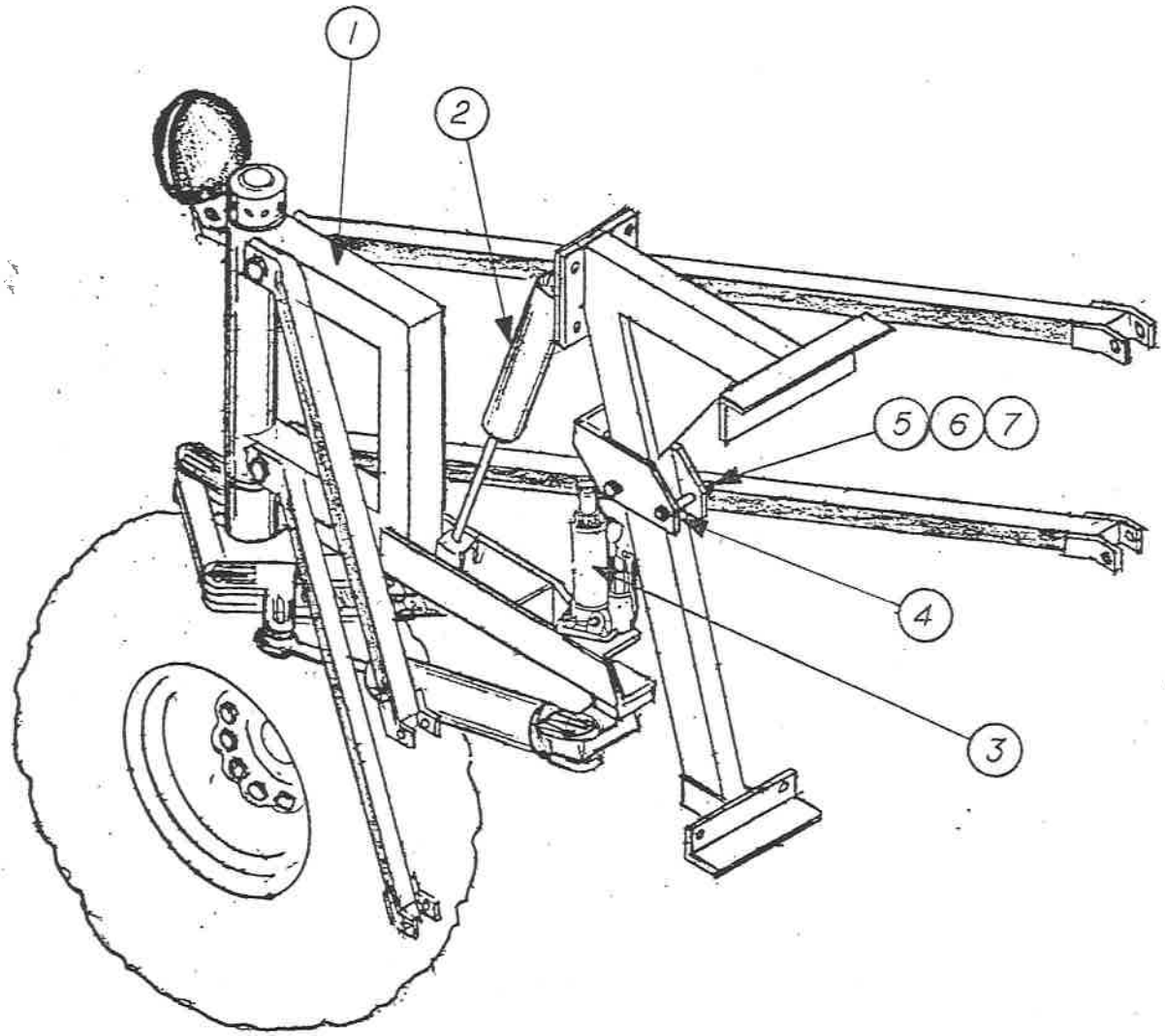
1
2
5
6
7
4
3

PARTS LIST

EMERGENCY TOW JACK

Ref No.	Part No.	Description	Qty.
1	003014	Spindle Column Wld	1
2	002144	Cyl, Digger	1
3	002162P	Jack, 2 Ton Bottle	1
4	002159	Brkt Emergency Jack	1
5	000996P	Bolt, 5/8-11 NC x 3-3/4"	2
6	000935P	Washer, Lock, 5/8"	2
7	000932P	Nut, Lock, 5/8-11 NC	2

INSTRUCTION: In case of power or Digger Cylinder (#2) Failure, use Hyd. Jack (#3) (located in Battery Box) to raise Digger Points. Follow these steps:

1. Locate Jack (#3) on Spindle Column (#1) as shown.
2. Loosen Bolts (#5) and lower Emergency Jack Bracket (#4) down to jack. Be sure to position jack ram into the socket of Jack Bracket. (#4)
3. As you jack the front end up, it may be necessary to release line pressure by operating the "Digger" valve handle periodically.